Folha de Respostas - Aula 9

Nome do Aluno: Felipe Uehara Gondo **No. USP: 13680612**

Instruções: Durante a prática, completar os campos abaixo com apenas as informações e dados solicitados. A enumeração a seguir corresponde àquela da apostila prática.

Item 3.d) Identifique a(s) biblioteca(s) utilizada(s) exclusivamante nesta fase da síntese. Para cada uma delas (se houver mais que uma), liste cinco tipos de blocos encontrados no seu esquema e uma instância associada a cada um destes tipos.

Para a síntese do projeto, foram utilizadas as bibliotecas PRIMITIVES, tsmc035_typ, a work (criada pelos arquivos .vhd carregados para a geração do projeto) e OPERATORS:

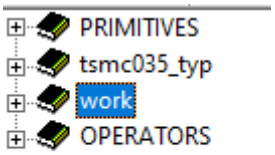

A biblioteca PRIMITIVES é composta por portas lógicas simples (AND, NOT, NAND) e outros elementos básicos digitais (resistor de pull-up/down, multiplexador, buffer etc.):

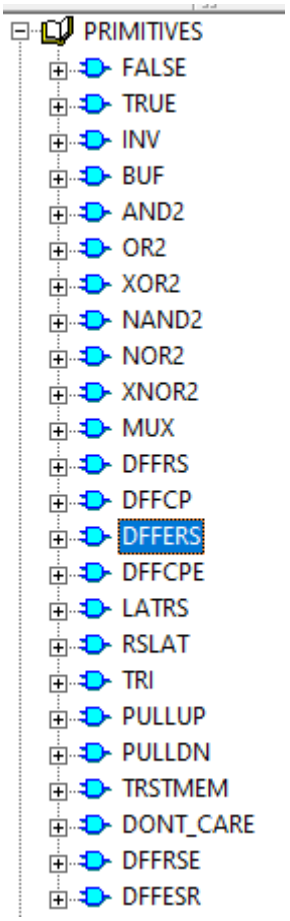

A biblioteca tsmc035_typ é composta por blocos e células lógicos criados para aplicações do tipo ASIC. Nessa lista de células, estão disponíveis elementos como latches, portas lógicas de

múltiplos bits, buffers; mas também há blocos específicos em que se mesclam diversas portas lógicas:

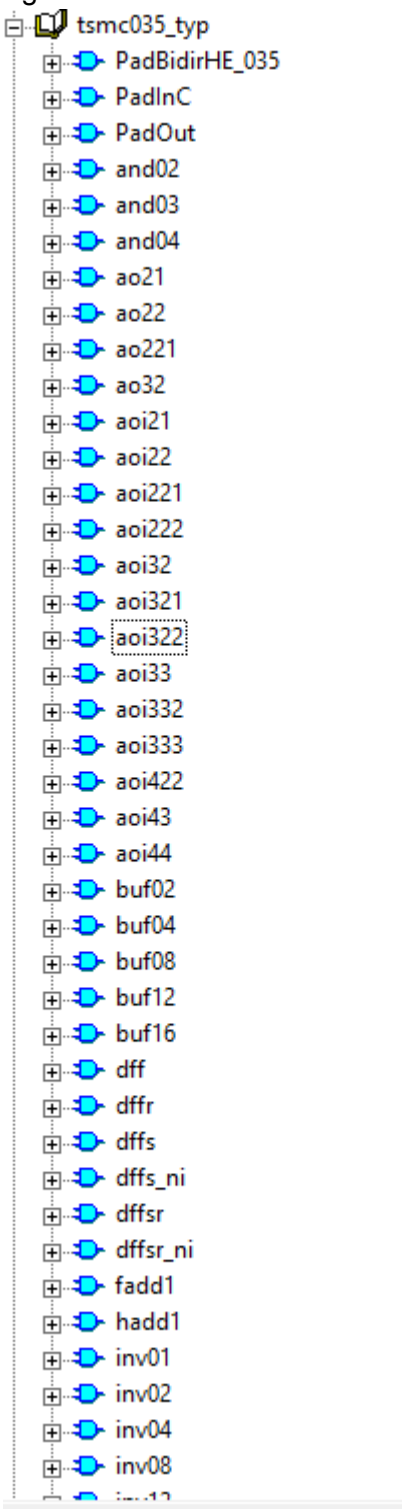

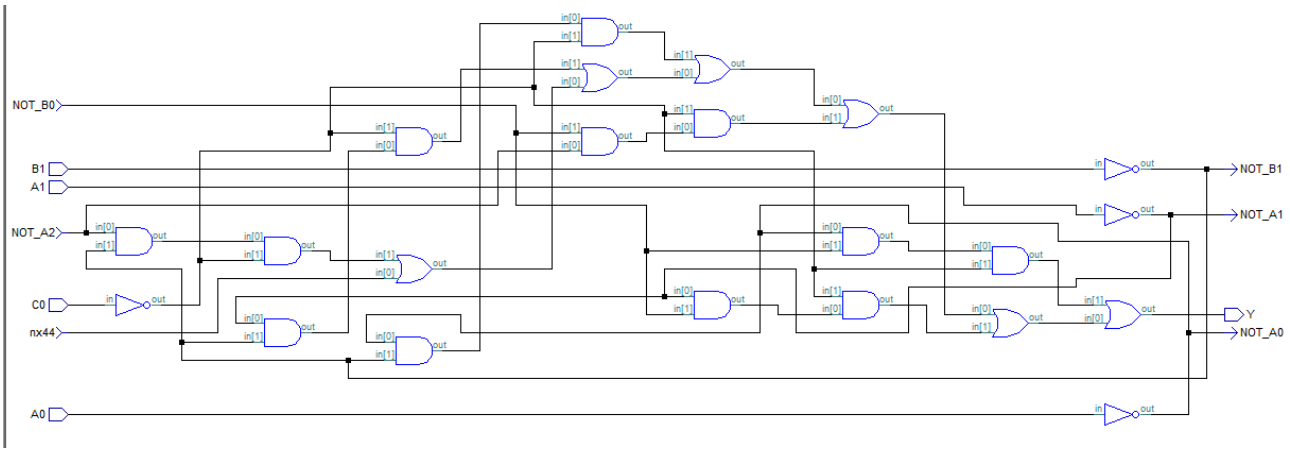

Bloco aoi322

Na biblioteca work, está presente as entidades dos arquivos .vhd carregados, os quais são instanciados utilizando os elementos, funções e blocos das bibliotecas anteriores

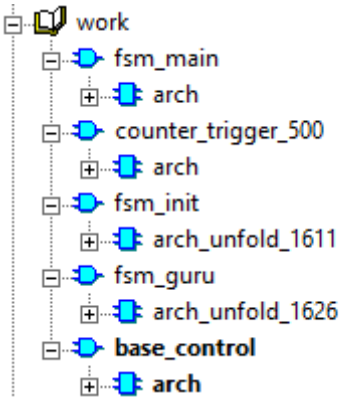

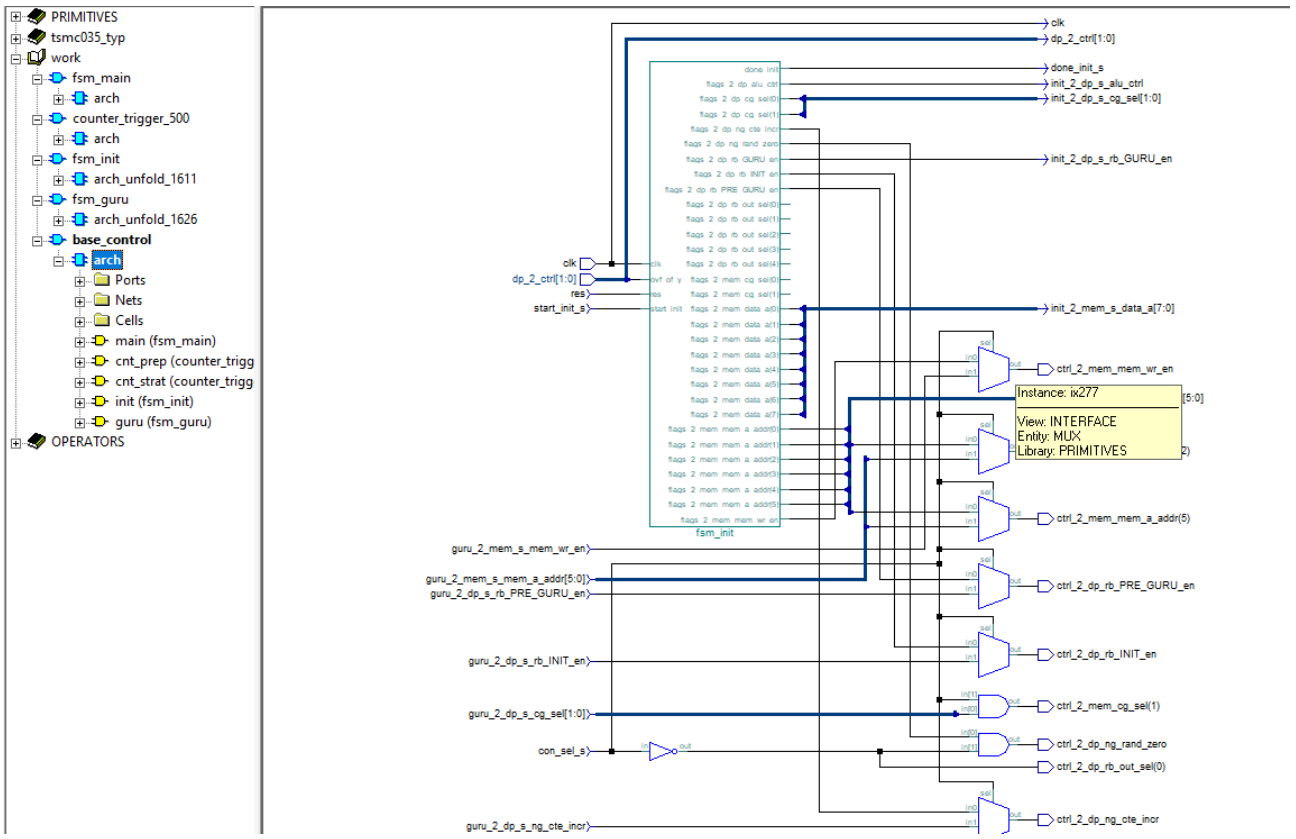

bloco arch da biblioteca work utilizando blocos lógicos da biblioteca PRIMITIVES

Por fim, a biblioteca OPERATORS possui alguns blocos lógicos adicionais tais como multiplexadores de 4 bits, decodificadores, contadores síncronos e outros:

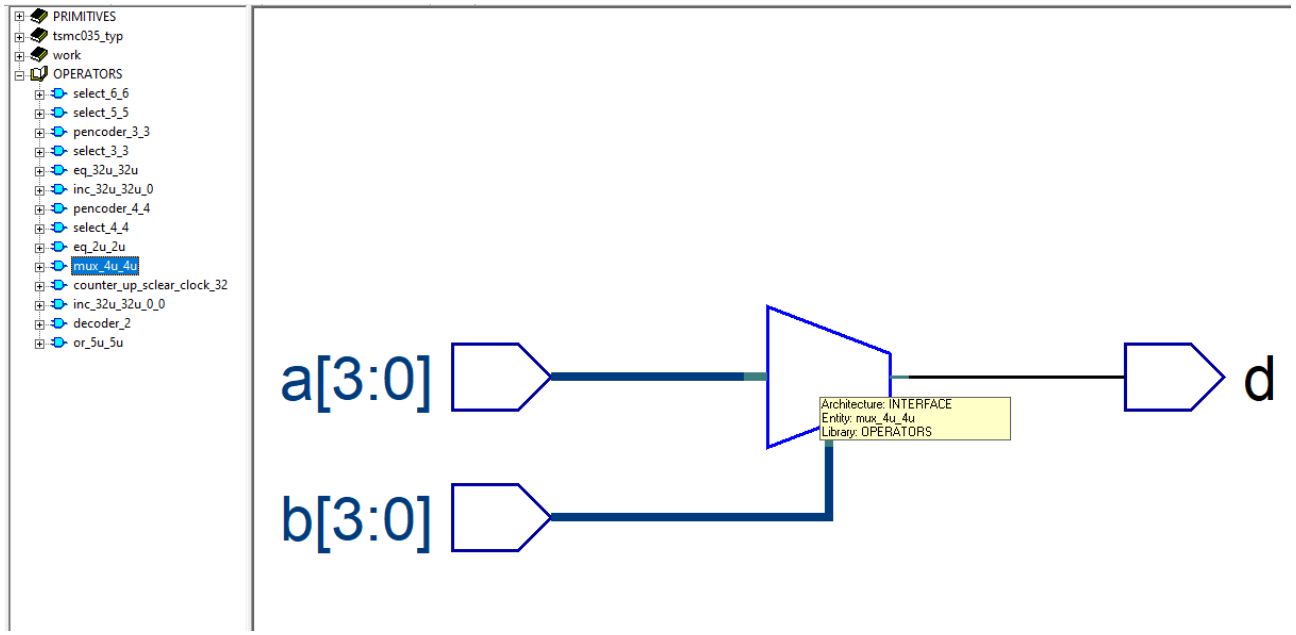

Item 4.d) Liste a(s) biblioteca(s) utilizada(s) <u>exclusivamante nesta fase da síntese</u>. Para cada uma delas (se houver mais que uma), liste <u>cinco tipos de blocos</u> da biblioteca encontrados no seu esquema.

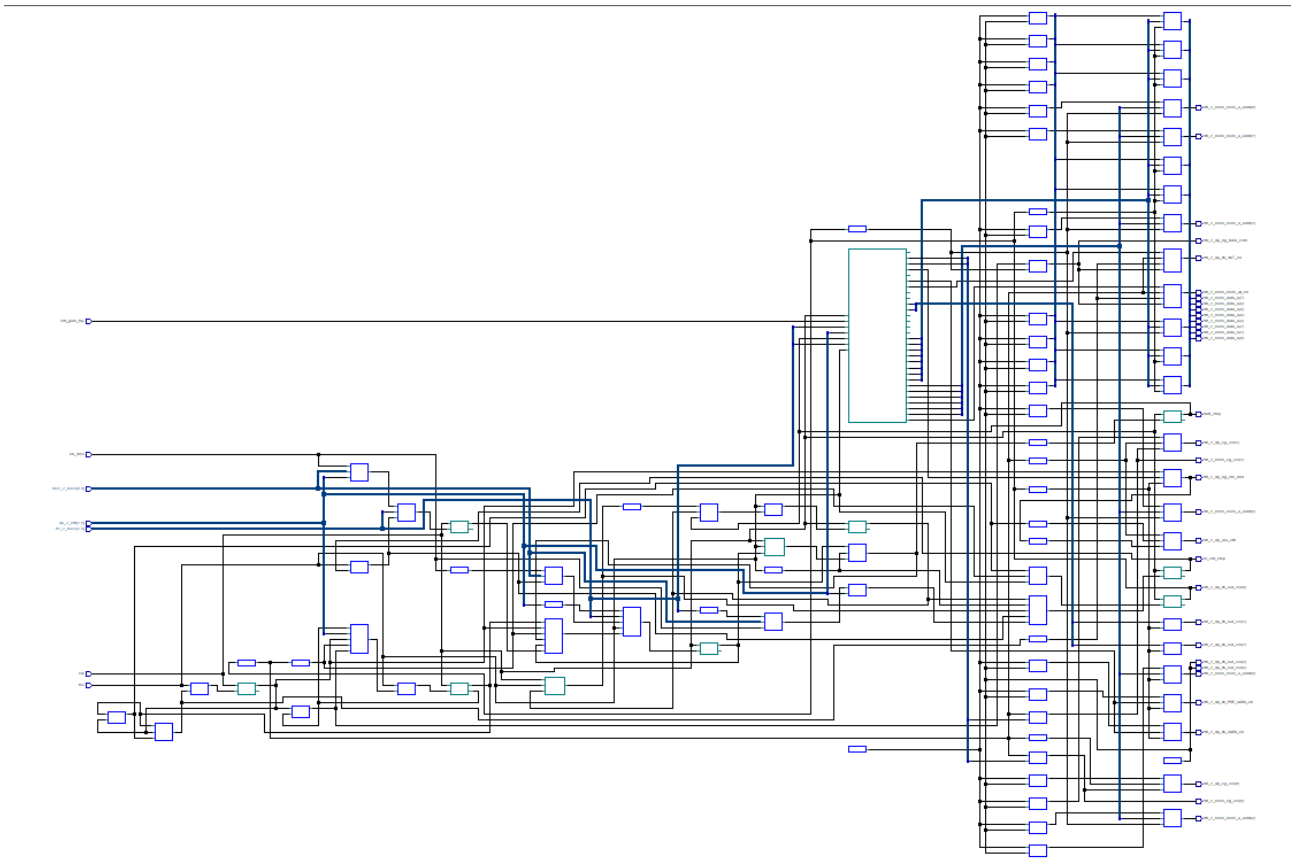

Semelhantemente ao item anterior, as bibliotecas utilizadas para a síntese do projeto contido em work foram tsmc035_typ, primitives e operators.

Item 5) Insira no quadro abaixo o relatório de área do circuito gate level (0,35um-345MHz)

```
*****************************************************

Cell: fsm_guru    View: arch_unfold_1626    Library: work

*****************************************************


 Cell       Library  References     Total Area

and02       tsmc035_typ     1 x      1      1 gates
and03       tsmc035_typ     1 x      2      2 gates
and04       tsmc035_typ     1 x      2      2 gates
aoi21       tsmc035_typ     3 x      1      4 gates
dff         tsmc035_typ    11 x      5     53 gates
fake_gnd    tsmc035_typ     1 x      1      1 fake_gnd
fake_vcc    tsmc035_typ     1 x      1      1 fake_vcc
inv01       tsmc035_typ     7 x      1      5 gates
nand02      tsmc035_typ     2 x      1      2 gates
nand04      tsmc035_typ     1 x      1      1 gates
nor02ii     tsmc035_typ     3 x      1      4 gates
nor03_2x    tsmc035_typ     4 x      1      5 gates
nor04       tsmc035_typ     1 x      1      1 gates
oai22       tsmc035_typ     1 x      1      1 gates
or03        tsmc035_typ     1 x      2      2 gates
tri01       tsmc035_typ    15 x      1     18 gates

 Number of ports :                    37
 Number of nets :                     64
 Number of instances :                  54
 Number of references to this view :     1

Total accumulated area :
 Number of fake_gnd :                   1
 Number of fake_vcc :                   1
 Number of gates :                    100
 Number of accumulated instances :      54

*****************************************************

Cell: counter_trigger_500    View: arch    Library: work

*****************************************************


 Cell       Library  References     Total Area

and02       tsmc035_typ    23 x      1     29 gates
and03       tsmc035_typ    19 x      2     29 gates
```

```
and04        tsmc035_typ    17 x      2     30 gates
aoi21        tsmc035_typ     3 x      1      4 gates
aoi22        tsmc035_typ     1 x      1      1 gates
buf02        tsmc035_typ     4 x      1      4 gates
buf16        tsmc035_typ    12 x      3     35 gates
dff          tsmc035_typ    33 x      5    158 gates
inv01        tsmc035_typ    23 x      1     17 gates
inv02        tsmc035_typ    25 x      1     19 gates
inv04        tsmc035_typ     4 x      1      4 gates
nand02       tsmc035_typ     3 x      1      3 gates
nand02_2x    tsmc035_typ    11 x      1     11 gates
nand03       tsmc035_typ     1 x      1      1 gates
nand03_2x    tsmc035_typ     5 x      1      6 gates
nand04_2x    tsmc035_typ    10 x      2     19 gates
nor02_2x     tsmc035_typ    18 x      1     18 gates
nor02ii      tsmc035_typ     7 x      1      9 gates
nor03_2x     tsmc035_typ    15 x      1     19 gates
nor04_2x     tsmc035_typ    11 x      2     21 gates
oai21        tsmc035_typ     1 x      1      1 gates
oai22        tsmc035_typ     2 x      1      3 gates
oai321       tsmc035_typ     1 x      2      2 gates
oai332       tsmc035_typ     1 x      3      3 gates
or02         tsmc035_typ     3 x      1      4 gates
or03         tsmc035_typ     1 x      2      2 gates

 Number of ports :                    4
 Number of nets :                   273
 Number of instances :              254
 Number of references to this view :    2

Total accumulated area :
 Number of gates :                  452
 Number of accumulated instances :    254

*****************************************************

Cell: base_control    View: arch    Library: work

*****************************************************


 Cell                 Library  References     Total Area

and02                 tsmc035_typ     2 x      1      3 gates
and03                 tsmc035_typ     2 x      2      3 gates
ao21                  tsmc035_typ     3 x      2      5 gates
ao22                  tsmc035_typ     2 x      2      4 gates
ao32                  tsmc035_typ     1 x      2      2 gates
aoi21                 tsmc035_typ     2 x      1      2 gates
aoi32                 tsmc035_typ     1 x      2      2 gates
aoi321                tsmc035_typ     1 x      2      2 gates
counter_trigger_500    work           2 x    452    904 gates
dff                   tsmc035_typ     8 x      5     38 gates
```

```
fake_gnd          tsmc035_typ    1 x     1     1 fake_gnd
fake_vcc          tsmc035_typ    1 x     1     1 fake_vcc
fsm_guru          work           1 x   100   100 gates
                                       1     1 fake_gnd
                                       1     1 fake_vcc
inv01             tsmc035_typ    9 x     1     7 gates
inv02             tsmc035_typ    7 x     1     5 gates
mux21_ni          tsmc035_typ   18 x     2    33 gates
nand02            tsmc035_typ    2 x     1     2 gates
nand03            tsmc035_typ    1 x     1     1 gates
nor02_2x          tsmc035_typ    4 x     1     4 gates
nor02ii           tsmc035_typ    4 x     1     5 gates
oai21             tsmc035_typ    2 x     1     2 gates
oai32             tsmc035_typ    1 x     2     2 gates
tri01             tsmc035_typ   18 x     1    21 gates

 Number of ports :                    41
 Number of nets :                    124
 Number of instances :                93
 Number of references to this view :   0

Total accumulated area :
 Number of fake_gnd :                  2
 Number of fake_vcc :                  2
 Number of gates :                  1148
 Number of accumulated instances :   652
```

No quadro abaixo, coloque o valor dos seguintes parâmetros: número de DFFs, área de cada DFF, área total de DFFs; o mesmo para NAND2s; e área total do circuito. Responda: a área total de DFFs e NAND2s correspondem à multiplicação da área individual com o número de instâncias? Por quê?

- número de DFFs: 11 (em fsm_guru), 33 (em counter_trigger_500) e 8 (em base_control), totalizando 15 unidades
- área de cada DFFs: 5 (em fsm_guru), 5 (em counter_trigger_500) e 5(em base_control)
- área total de DFFs: 53 (em fsm_guru), 158 (em counter_trigger_500) e 38 (em base_control)

- área de cada NAND2s: 1
- área total de NAND2s: 2 (em fsm_guru), 3 (em counter_trigger_500) e 2 (em base_control), totalizando 7 área de cada gate

- área total do circuito: 1148 gates

A área total de DFFs e de NAND2s não corresponde a multiplicação da área individual com o número de instâncias no projeto. Isso acontece porque o Leonardo realiza uma aproximação da

do peso de cada instâncias feitas, podendo ser 1 unidade maior ou menor que o projeto em si. Por exemplo, em fsm_guru, há 11 DFFs pesando cada um 5 gates enquanto no report de área constam 53 unidades de gate nesse bloco. Como o peso de cada bloco não ser um valor inteiro, o peso total de DFF nesta arquitetura não pode ser encontrado simplesmente realizando o produto da quantidade pelo peso individual.

Insira no quadro abaixo o relatório de timing do circuito gate level (0,35um-345MHz)

```
Clock Frequency Report

Clock              : Frequency
-----------------------------------

clk                : 308.9 MHz


Critical Path Report


Critical path #1, (path slack = -0.3):

NAME                                GATE          ARRIVAL          LOAD
-----------------------------------------------------------------------------------------
clock information not specified
delay thru clock network                                  0.00 (worst case)


cnt_strat/reg_cnt_s(4)/Q                dff       0.00  0.52 dn          0.05
cnt_strat/cnt_s(4)                (net)           0.00  0.52 dn   (fan)    2.00
cnt_strat/ix1125/A                      buf16     0.00  0.52 dn          0.00
cnt_strat/ix1125/Y                      buf16     0.25  0.77 dn          0.07
cnt_strat/nx1021                  (net)           0.00  0.77 dn   (fan)    5.00
cnt_strat/ix1113/A1                     and04     0.00  0.77 dn          0.00
cnt_strat/ix1113/Y                      and04     0.29  1.06 dn          0.02
cnt_strat/nx1009                  (net)           0.00  1.06 dn   (fan)    1.00
cnt_strat/ix1114/A1                     nand04_2x   0.00  1.06 dn          0.00
cnt_strat/ix1114/Y                      nand04_2x   0.18  1.24 up          0.02
cnt_strat/nx1010                  (net)           0.00  1.24 up   (fan)    1.00
cnt_strat/reg_cnt_rdy/A0                nor02_2x    0.00  1.24 up          0.00
cnt_strat/reg_cnt_rdy/Y                 nor02_2x    0.16  1.40 dn          0.03
cnt_start_f_s                     (net)           0.00  1.40 dn   (fan)    3.00
cnt_strat/ix790/A0                      or02      0.00  1.40 dn          0.00
cnt_strat/ix790/Y                       or02      0.43  1.82 dn          0.05
cnt_strat/nx500                   (net)           0.00  1.82 dn   (fan)    2.00
cnt_strat/ix1127/A                      buf16     0.00  1.82 dn          0.00
cnt_strat/ix1127/Y                      buf16     0.29  2.11 dn          0.09
cnt_strat/nx1023                  (net)           0.00  2.11 dn   (fan)    5.00
cnt_strat/ix1038/A0                     or03      0.00  2.11 dn          0.00
cnt_strat/ix1038/Y                      or03      0.44  2.55 dn          0.02
cnt_strat/nx934                   (net)           0.00  2.55 dn   (fan)    1.00
cnt_strat/reg_nx564/A2                  oai332    0.00  2.55 dn          0.00
cnt_strat/reg_nx564/Y                   oai332    0.25  2.80 up          0.01
cnt_strat/nx564                   (net)           0.00  2.80 up   (fan)    1.00
cnt_strat/ix1128/A                      buf02     0.00  2.80 up          0.00
cnt_strat/ix1128/Y                      buf02     0.22  3.03 up          0.02
cnt_strat/nx1129                  (net)           0.00  3.03 up   (fan)    1.00
cnt_strat/reg_cnt_s(30)/D               dff       0.00  3.03 up          0.00
data arrival time                                 3.03
```

```
data required time  (default specified - setup time)              2.69
-----------------------------------------------------------------------------------------
data required time                                        2.69
data arrival time                                       3.03
                                                   ----------
slack                                                  -0.34
-----------------------------------------------------------------------------------------
```

No quadro abaixo, coloque o valor dos seguintes parâmetros (mostre os cálculos para os que não são diretamente indicados no relatório): a) $F_{especificada}$, b) $T_{especificado}$, c) $t_{chegada}$, d) $f_{projetado}$, e) $T_{projetado}$, f) folga (*slack*), g) t_{setup}.

- F_especificada = 345Mhz
- T_especificado =1/345M= 2.90ns
- t_chegada = 3.03ns
- f_projetado = 308.9Mhz
- T_projetado = 3.22ns
- slack = -0.34
- t_setup = 0.19ns

Item 6) Insira a descrição completa VHDL do circuito em gate level.

```
-- Definition of  base_control
--
--      04/23/26 16:10:04
--
--      LeonardoSpectrum Level 3, 2012b.6
--

library IEEE;
use IEEE.STD_LOGIC_1164.all;

entity counter_trigger_500 is
   port (
      clk : IN std_logic ;
      res : IN std_logic ;
      trigger : IN std_logic ;
      cnt_rdy : OUT std_logic) ;
end counter_trigger_500 ;

architecture arch of counter_trigger_500 is
   signal cnt_s_31, cnt_s_30, cnt_s_29, cnt_s_28, cnt_s_27, cnt_s_26,
      cnt_s_25, cnt_s_24, cnt_s_23, cnt_s_22, cnt_s_21, cnt_s_20, cnt_s_19,
      cnt_s_18, cnt_s_17, cnt_s_16, cnt_s_15, cnt_s_14, cnt_s_13, cnt_s_12,
      cnt_s_11, cnt_s_10, cnt_s_7, cnt_s_6, cnt_s_5, cnt_s_4, cnt_s_3,
      cnt_s_2, cnt_s_1, cnt_s_0, nx500, nx10, nx26, nx42, nx60, nx78, nx96,
      nx114, nx132, nx150, nx168, nx186, nx204, nx222, nx240, nx258, nx276,
      nx294, nx312, nx330, nx348, nx366, nx384, nx402, nx420, nx438, nx456,
      nx474, nx492, nx510, nx528, nx546, nx559, nx571, nx586, nx591, nx605,
      nx609, nx619, nx623, nx627, nx637, nx641, nx645, nx655, nx659, nx663,
      nx673, nx677, nx681, nx691, nx695, nx699, nx706, nx709, nx712, nx719,
      nx722, nx725, nx732, nx738, nx745, nx748, nx751, nx758, nx761, nx764,
      nx771, nx775, nx779, nx784, nx787, nx795, nx797, nx799, nx801, nx846,
      nx848, nx850, nx852, nx856, nx866, nx870, nx872, nx874, nx876, nx878,
      nx880, nx882, nx884, nx886, nx888, nx890, nx894, nx512, cnt_s_8, nx735,
      cnt_s_9, nx920, nx921, nx922, nx858, nx923, nx924, nx925, nx926, nx578,
      nx927, nx928, nx929, nx930, nx931, nx932, nx933, nx934, nx935, nx936,
      nx937, nx564, nx938, nx939, nx892, nx754, nx505, nx767, nx940, nx941,
      nx942, nx864, nx943, nx944, nx536, nx945, nx946, nx741, nx947, nx948,
      nx949, nx950, nx951, nx952, nx953, nx954, NOT_nx563, nx955, nx613,
      nx956, nx957, nx509, nx728, nx958, nx959, nx960, nx575, NOT_nx579,
      nx961, nx595, nx962, nx963, nx964, nx514, nx715, nx965, nx966, nx967,
      nx516, nx702, nx968, nx969, nx970, nx971, nx972, nx973, nx974, nx975,
      nx583, nx534, nx631, nx976, nx977, nx527, nx978, nx518, nx685, nx979,
```

```
      nx980, nx981, nx982, nx983, nx984, nx985, nx986, nx987, nx523, nx988,
      nx989, nx521, nx667, nx990, nx991, nx992, nx993, nx994, nx995, nx996,
      nx997, nx998, nx999, nx532, nx868, nx1000, nx1001, nx530, nx649,
      nx1002, nx1003, nx1004, nx1005, nx1006, nx1007, nx1008, nx1009, nx1010,
      nx1011, cnt_rdy_EXMPLR, nx1012, nx1013, nx1014, nx1015, nx1016, nx1017,
      nx1018, nx1019, nx1020, nx1021, nx1022, nx1023, nx1129, nx1131, nx1133
   : std_logic ;

begin
   cnt_rdy <= cnt_rdy_EXMPLR ;
   reg_cnt_s_31 : dff port map ( Q=>cnt_s_31, QB=>OPEN, D=>nx578, CLK=>clk);
   reg_cnt_s_30 : dff port map ( Q=>cnt_s_30, QB=>nx559, D=>nx1129, CLK=>clk
   );
   reg_cnt_s_29 : dff port map ( Q=>cnt_s_29, QB=>OPEN, D=>nx546, CLK=>clk);
   ix529 : nor03_2x port map ( Y=>nx528, A0=>nx575, A1=>nx536, A2=>nx852);
   reg_cnt_s_28 : dff port map ( Q=>cnt_s_28, QB=>nx571, D=>nx528, CLK=>clk
   );
   reg_cnt_s_27 : dff port map ( Q=>cnt_s_27, QB=>OPEN, D=>nx510, CLK=>clk);
   ix496 : nor03_2x port map ( Y=>nx492, A0=>nx591, A1=>nx534, A2=>nx852);
   reg_cnt_s_26 : dff port map ( Q=>cnt_s_26, QB=>nx586, D=>nx492, CLK=>clk
   );
   reg_cnt_s_25 : dff port map ( Q=>cnt_s_25, QB=>OPEN, D=>nx474, CLK=>clk);
   ix457 : nor03_2x port map ( Y=>nx456, A0=>nx609, A1=>nx532, A2=>nx852);
   reg_cnt_s_24 : dff port map ( Q=>cnt_s_24, QB=>nx605, D=>nx456, CLK=>clk
   );
   reg_cnt_s_23 : dff port map ( Q=>cnt_s_23, QB=>OPEN, D=>nx438, CLK=>clk);
   ix620 : nor02_2x port map ( Y=>nx619, A0=>nx530, A1=>cnt_s_23);
   ix421 : nor03_2x port map ( Y=>nx420, A0=>nx627, A1=>nx530, A2=>nx850);
   reg_cnt_s_22 : dff port map ( Q=>cnt_s_22, QB=>nx623, D=>nx420, CLK=>clk
   );
   reg_cnt_s_21 : dff port map ( Q=>cnt_s_21, QB=>OPEN, D=>nx402, CLK=>clk);
   ix638 : nor02_2x port map ( Y=>nx637, A0=>nx527, A1=>cnt_s_21);
   ix385 : nor03_2x port map ( Y=>nx384, A0=>nx645, A1=>nx527, A2=>nx850);
   reg_cnt_s_20 : dff port map ( Q=>cnt_s_20, QB=>nx641, D=>nx384, CLK=>clk
   );
   reg_cnt_s_19 : dff port map ( Q=>cnt_s_19, QB=>OPEN, D=>nx366, CLK=>clk);
   ix656 : nor02_2x port map ( Y=>nx655, A0=>nx1131, A1=>cnt_s_19);
   ix349 : nor03_2x port map ( Y=>nx348, A0=>nx663, A1=>nx1131, A2=>nx850);
   reg_cnt_s_18 : dff port map ( Q=>cnt_s_18, QB=>nx659, D=>nx348, CLK=>clk
   );
   reg_cnt_s_17 : dff port map ( Q=>cnt_s_17, QB=>OPEN, D=>nx330, CLK=>clk);
   ix674 : nor02_2x port map ( Y=>nx673, A0=>nx521, A1=>cnt_s_17);
   ix313 : nor03_2x port map ( Y=>nx312, A0=>nx681, A1=>nx521, A2=>nx850);
   reg_cnt_s_16 : dff port map ( Q=>cnt_s_16, QB=>nx677, D=>nx312, CLK=>clk
```

```
);
reg_cnt_s_15 : dff port map ( Q=>cnt_s_15, QB=>OPEN, D=>nx294, CLK=>clk);
ix692 : nor02_2x port map ( Y=>nx691, A0=>nx518, A1=>cnt_s_15);
ix277 : nor03_2x port map ( Y=>nx276, A0=>nx699, A1=>nx518, A2=>nx848);
reg_cnt_s_14 : dff port map ( Q=>cnt_s_14, QB=>nx695, D=>nx276, CLK=>clk
);
reg_cnt_s_13 : dff port map ( Q=>cnt_s_13, QB=>OPEN, D=>nx258, CLK=>clk);
ix707 : nor02_2x port map ( Y=>nx706, A0=>nx516, A1=>cnt_s_13);
ix241 : nor03_2x port map ( Y=>nx240, A0=>nx712, A1=>nx516, A2=>nx848);
reg_cnt_s_12 : dff port map ( Q=>cnt_s_12, QB=>nx709, D=>nx240, CLK=>clk
);
reg_cnt_s_11 : dff port map ( Q=>cnt_s_11, QB=>OPEN, D=>nx222, CLK=>clk);
ix720 : nor02_2x port map ( Y=>nx719, A0=>nx514, A1=>cnt_s_11);
ix205 : nor03_2x port map ( Y=>nx204, A0=>nx725, A1=>nx514, A2=>nx848);
reg_cnt_s_10 : dff port map ( Q=>cnt_s_10, QB=>nx722, D=>nx204, CLK=>clk
);
ix733 : nor02_2x port map ( Y=>nx732, A0=>nx512, A1=>cnt_s_9);
ix169 : nor03_2x port map ( Y=>nx168, A0=>nx738, A1=>nx512, A2=>nx846);
reg_cnt_s_7 : dff port map ( Q=>cnt_s_7, QB=>OPEN, D=>nx150, CLK=>clk);
ix746 : nor02_2x port map ( Y=>nx745, A0=>nx509, A1=>cnt_s_7);
ix133 : nor03_2x port map ( Y=>nx132, A0=>nx751, A1=>nx509, A2=>nx846);
reg_cnt_s_6 : dff port map ( Q=>cnt_s_6, QB=>nx748, D=>nx132, CLK=>clk);
reg_cnt_s_5 : dff port map ( Q=>cnt_s_5, QB=>OPEN, D=>nx114, CLK=>clk);
ix759 : nor02_2x port map ( Y=>nx758, A0=>nx505, A1=>cnt_s_5);
ix97 : nor03_2x port map ( Y=>nx96, A0=>nx764, A1=>nx505, A2=>nx846);
reg_cnt_s_4 : dff port map ( Q=>cnt_s_4, QB=>nx761, D=>nx96, CLK=>clk);
ix79 : aoi21 port map ( Y=>nx78, A0=>nx771, A1=>nx799, B0=>nx801);
ix772 : nand03 port map ( Y=>nx771, A0=>nx1016, A1=>nx1012, A2=>nx1014);
ix61 : aoi21 port map ( Y=>nx60, A0=>nx775, A1=>nx795, B0=>nx797);
ix776 : nand02 port map ( Y=>nx775, A0=>nx1012, A1=>nx1014);
reg_cnt_s_1 : dff port map ( Q=>cnt_s_1, QB=>OPEN, D=>nx42, CLK=>clk);
ix780 : nor02_2x port map ( Y=>nx779, A0=>nx1014, A1=>nx1012);
reg_cnt_s_0 : dff port map ( Q=>cnt_s_0, QB=>OPEN, D=>nx26, CLK=>clk);
ix11 : nor02_2x port map ( Y=>nx10, A0=>res, A1=>nx787);
ix788 : aoi21 port map ( Y=>nx787, A0=>trigger, A1=>nx784, B0=>nx892);
reg_STATE : dff port map ( Q=>OPEN, QB=>nx784, D=>nx10, CLK=>clk);
reg_cnt_s_2 : dff port map ( Q=>cnt_s_2, QB=>nx795, D=>nx60, CLK=>clk);
ix798 : nand02 port map ( Y=>nx797, A0=>nx771, A1=>nx892);
reg_cnt_s_3 : dff port map ( Q=>cnt_s_3, QB=>nx799, D=>nx78, CLK=>clk);
ix802 : nand02 port map ( Y=>nx801, A0=>nx767, A1=>nx892);
ix845 : inv04 port map ( Y=>nx846, A=>nx892);
ix847 : inv04 port map ( Y=>nx848, A=>nx892);
ix849 : inv04 port map ( Y=>nx850, A=>nx892);
ix851 : inv04 port map ( Y=>nx852, A=>nx858);
```

```
ix855 : inv02 port map ( Y=>nx856, A=>nx1022);
ix547 : and03 port map ( Y=>nx546, A0=>nx864, A1=>nx929, A2=>nx858);
ix511 : and03 port map ( Y=>nx510, A0=>nx866, A1=>nx945, A2=>nx858);
ix865 : inv01 port map ( Y=>nx866, A=>nx583);
ix592 : and02 port map ( Y=>nx591, A0=>nx586, A1=>nx595);
ix475 : and03 port map ( Y=>nx474, A0=>nx868, A1=>nx962, A2=>nx858);
ix610 : and02 port map ( Y=>nx609, A0=>nx605, A1=>nx613);
ix439 : and03 port map ( Y=>nx438, A0=>nx870, A1=>nx613, A2=>nx858);
ix869 : inv01 port map ( Y=>nx870, A=>nx619);
ix628 : and02 port map ( Y=>nx627, A0=>nx623, A1=>nx631);
ix403 : and03 port map ( Y=>nx402, A0=>nx872, A1=>nx976, A2=>nx894);
ix871 : inv01 port map ( Y=>nx872, A=>nx637);
ix646 : and02 port map ( Y=>nx645, A0=>nx641, A1=>nx649);
ix367 : and03 port map ( Y=>nx366, A0=>nx874, A1=>nx649, A2=>nx894);
ix873 : inv01 port map ( Y=>nx874, A=>nx655);
ix664 : and02 port map ( Y=>nx663, A0=>nx659, A1=>nx667);
ix331 : and03 port map ( Y=>nx330, A0=>nx876, A1=>nx667, A2=>nx894);
ix875 : inv01 port map ( Y=>nx876, A=>nx673);
ix682 : and02 port map ( Y=>nx681, A0=>nx677, A1=>nx685);
ix295 : and03 port map ( Y=>nx294, A0=>nx878, A1=>nx685, A2=>nx894);
ix877 : inv01 port map ( Y=>nx878, A=>nx691);
ix700 : and02 port map ( Y=>nx699, A0=>nx695, A1=>nx702);
ix259 : and03 port map ( Y=>nx258, A0=>nx880, A1=>nx702, A2=>nx894);
ix879 : inv01 port map ( Y=>nx880, A=>nx706);
ix713 : and02 port map ( Y=>nx712, A0=>nx709, A1=>nx715);
ix223 : and03 port map ( Y=>nx222, A0=>nx882, A1=>nx715, A2=>nx894);
ix881 : inv01 port map ( Y=>nx882, A=>nx719);
ix726 : and02 port map ( Y=>nx725, A0=>nx722, A1=>nx920);
ix187 : and03 port map ( Y=>nx186, A0=>nx884, A1=>nx920, A2=>nx894);
ix883 : inv01 port map ( Y=>nx884, A=>nx732);
ix739 : and02 port map ( Y=>nx738, A0=>nx735, A1=>nx741);
ix151 : and03 port map ( Y=>nx150, A0=>nx886, A1=>nx741, A2=>nx856);
ix885 : inv01 port map ( Y=>nx886, A=>nx745);
ix752 : and02 port map ( Y=>nx751, A0=>nx748, A1=>nx754);
ix115 : and03 port map ( Y=>nx114, A0=>nx888, A1=>nx754, A2=>nx856);
ix887 : inv01 port map ( Y=>nx888, A=>nx758);
ix765 : and02 port map ( Y=>nx764, A0=>nx761, A1=>nx767);
ix43 : and03 port map ( Y=>nx42, A0=>nx890, A1=>nx775, A2=>nx856);
ix889 : inv01 port map ( Y=>nx890, A=>nx779);
ix27 : nor02ii port map ( Y=>nx26, A0=>nx1014, A1=>nx856);
ix790 : or02 port map ( Y=>nx500, A0=>cnt_rdy_EXMPLR, A1=>nx784);
ix893 : inv02 port map ( Y=>nx894, A=>nx1022);
ix177 : nor02ii port map ( Y=>nx512, A0=>nx741, A1=>cnt_s_8);
reg_cnt_s_8 : dff port map ( Q=>cnt_s_8, QB=>nx735, D=>nx168, CLK=>clk);
```

```
reg_cnt_s_9 : dff port map ( Q=>cnt_s_9, QB=>OPEN, D=>nx186, CLK=>clk);
ix1024 : buf02 port map ( Y=>nx920, A=>nx728);
ix1025 : inv02 port map ( Y=>nx921, A=>cnt_s_31);
ix1026 : and02 port map ( Y=>nx922, A0=>cnt_s_30, A1=>cnt_s_28);
reg_nx858 : inv02 port map ( Y=>nx858, A=>nx1022);
ix1027 : nand04_2x port map ( Y=>nx923, A0=>nx922, A1=>nx858, A2=>
   cnt_s_29, A3=>nx921);
ix1028 : nand03_2x port map ( Y=>nx924, A0=>cnt_s_30, A1=>cnt_s_29, A2=>
   cnt_s_28);
ix1029 : nor02_2x port map ( Y=>nx925, A0=>nx921, A1=>nx1022);
ix1030 : nand02_2x port map ( Y=>nx926, A0=>nx924, A1=>nx925);
reg_nx578 : oai321 port map ( Y=>nx578, A0=>NOT_nx579, A1=>nx921, A2=>
   nx1023, B0=>nx946, B1=>nx923, C0=>nx926);
ix1031 : inv02 port map ( Y=>nx927, A=>cnt_s_29);
ix1032 : inv02 port map ( Y=>nx928, A=>cnt_s_28);
ix1033 : inv01 port map ( Y=>nx929, A=>NOT_nx563);
ix1034 : inv02 port map ( Y=>nx930, A=>nx534);
ix1035 : or02 port map ( Y=>nx931, A0=>nx927, A1=>nx928);
ix1036 : inv02 port map ( Y=>nx932, A=>nx559);
ix1037 : inv02 port map ( Y=>nx933, A=>cnt_s_27);
ix1038 : or03 port map ( Y=>nx934, A0=>nx1023, A1=>nx932, A2=>nx933);
ix1039 : inv01 port map ( Y=>nx935, A=>nx928);
ix1040 : nand02_2x port map ( Y=>nx936, A0=>cnt_s_27, A1=>nx935);
ix1041 : aoi22 port map ( Y=>nx937, A0=>nx927, A1=>nx932, B0=>nx936, B1=>
   nx932);
reg_nx564 : oai332 port map ( Y=>nx564, A0=>nx930, A1=>nx931, A2=>nx934,
   B0=>nx534, B1=>nx1023, B2=>nx559, C0=>nx1023, C1=>nx937);
ix1042 : inv02 port map ( Y=>nx938, A=>nx927);
ix1043 : nor02ii port map ( Y=>nx939, A0=>nx928, A1=>cnt_s_27);
reg_nx892 : inv02 port map ( Y=>nx892, A=>nx1023);
reg_nx754 : nand03_2x port map ( Y=>nx754, A0=>nx947, A1=>nx948, A2=>
   nx949);
reg_nx505 : and04 port map ( Y=>nx505, A0=>nx1020, A1=>nx949, A2=>nx1018,
   A3=>nx1016);
reg_nx767 : nand04_2x port map ( Y=>nx767, A0=>nx1012, A1=>nx1014, A2=>
   nx1018, A3=>nx1016);
ix1044 : inv01 port map ( Y=>nx940, A=>nx928);
ix1045 : nand03_2x port map ( Y=>nx941, A0=>nx940, A1=>cnt_s_27, A2=>
   cnt_s_26);
ix1046 : inv02 port map ( Y=>nx942, A=>cnt_s_29);
reg_nx864 : oai21 port map ( Y=>nx864, A0=>nx963, A1=>nx941, B0=>nx942);
ix1047 : inv02 port map ( Y=>nx943, A=>cnt_s_27);
ix1048 : inv02 port map ( Y=>nx944, A=>cnt_s_26);
reg_nx536 : nor04_2x port map ( Y=>nx536, A0=>nx995, A1=>nx928, A2=>nx943,
```

```
   A3=>nx944);
ix1049 : inv01 port map ( Y=>nx945, A=>NOT_nx579);
ix1050 : inv01 port map ( Y=>nx946, A=>NOT_nx579);
reg_nx741 : nand02_2x port map ( Y=>nx741, A0=>cnt_s_7, A1=>nx509);
ix1051 : and02 port map ( Y=>nx947, A0=>nx1020, A1=>nx1016);
ix1052 : and02 port map ( Y=>nx948, A0=>cnt_s_5, A1=>nx1018);
ix1053 : and02 port map ( Y=>nx949, A0=>nx1012, A1=>nx1014);
ix1054 : and02 port map ( Y=>nx950, A0=>nx938, A1=>nx939);
ix1055 : inv02 port map ( Y=>nx951, A=>cnt_s_24);
ix1056 : inv02 port map ( Y=>nx952, A=>cnt_s_25);
ix1057 : inv02 port map ( Y=>nx953, A=>cnt_s_23);
ix1058 : nor04_2x port map ( Y=>nx954, A0=>nx951, A1=>nx944, A2=>nx952,
   A3=>nx953);
reg_NOT_nx563 : and03 port map ( Y=>NOT_nx563, A0=>nx530, A1=>nx950, A2=>
   nx954);
ix1059 : and02 port map ( Y=>nx955, A0=>cnt_s_25, A1=>cnt_s_23);
reg_nx613 : nand02_2x port map ( Y=>nx613, A0=>cnt_s_23, A1=>nx530);
ix1060 : nand03_2x port map ( Y=>nx956, A0=>cnt_s_6, A1=>nx1013, A2=>
   nx1015);
ix1061 : nand04_2x port map ( Y=>nx957, A0=>nx1017, A1=>nx1018, A2=>
   nx1020, A3=>cnt_s_5);
reg_nx509 : nor02_2x port map ( Y=>nx509, A0=>nx956, A1=>nx957);
reg_nx728 : nand04_2x port map ( Y=>nx728, A0=>nx509, A1=>cnt_s_8, A2=>
   cnt_s_9, A3=>cnt_s_7);
ix1062 : inv02 port map ( Y=>nx958, A=>nx571);
ix1063 : nand03_2x port map ( Y=>nx959, A0=>nx955, A1=>cnt_s_24, A2=>
   cnt_s_22);
ix1064 : nor03_2x port map ( Y=>nx960, A0=>nx959, A1=>nx943, A2=>nx944);
reg_nx575 : oai22 port map ( Y=>nx575, A0=>nx958, A1=>nx997, B0=>nx958,
   B1=>nx960);
reg_NOT_nx579 : nor02ii port map ( Y=>NOT_nx579, A0=>nx977, A1=>nx960);
ix1065 : and03 port map ( Y=>nx961, A0=>nx955, A1=>cnt_s_24, A2=>cnt_s_22
);
reg_nx595 : inv01 port map ( Y=>nx595, A=>nx996);
ix1066 : inv01 port map ( Y=>nx962, A=>nx996);
ix1067 : inv01 port map ( Y=>nx963, A=>nx996);
ix1068 : inv02 port map ( Y=>nx964, A=>cnt_s_22);
reg_nx514 : and04 port map ( Y=>nx514, A0=>nx969, A1=>nx968, A2=>cnt_s_10,
   A3=>nx970);
reg_nx715 : nand02_2x port map ( Y=>nx715, A0=>cnt_s_11, A1=>nx514);
ix1069 : and02 port map ( Y=>nx965, A0=>nx1013, A1=>nx1015);
ix1070 : nand04_2x port map ( Y=>nx966, A0=>cnt_s_8, A1=>nx965, A2=>
   cnt_s_12, A3=>cnt_s_6);
ix1071 : nand02_2x port map ( Y=>nx967, A0=>nx979, A1=>nx990);
```

```
reg_nx516 : nor02_2x port map ( Y=>nx516, A0=>nx966, A1=>nx967);
reg_nx702 : nand02_2x port map ( Y=>nx702, A0=>cnt_s_13, A1=>nx516);
ix1072 : and04 port map ( Y=>nx968, A0=>cnt_s_7, A1=>cnt_s_5, A2=>nx1017,
   A3=>nx1013);
ix1073 : and04 port map ( Y=>nx969, A0=>cnt_s_8, A1=>cnt_s_6, A2=>cnt_s_9,
   A3=>nx1020);
ix1074 : and02 port map ( Y=>nx970, A0=>nx1019, A1=>nx1015);
ix1075 : inv02 port map ( Y=>nx971, A=>nx649);
ix1076 : inv01 port map ( Y=>nx972, A=>nx954);
ix1077 : inv02 port map ( Y=>nx973, A=>cnt_s_21);
ix1078 : inv02 port map ( Y=>nx974, A=>cnt_s_20);
ix1079 : nor04_2x port map ( Y=>nx975, A0=>nx972, A1=>nx964, A2=>nx973,
   A3=>nx974);
reg_nx583 : oai22 port map ( Y=>nx583, A0=>nx971, A1=>cnt_s_27, B0=>nx975,
   B1=>cnt_s_27);
reg_nx534 : nor02ii port map ( Y=>nx534, A0=>nx649, A1=>nx975);
reg_nx631 : inv02 port map ( Y=>nx631, A=>nx997);
ix1080 : inv02 port map ( Y=>nx976, A=>nx997);
ix1081 : inv01 port map ( Y=>nx977, A=>nx997);
reg_nx527 : nor02_2x port map ( Y=>nx527, A0=>nx974, A1=>nx649);
ix1082 : and03 port map ( Y=>nx978, A0=>cnt_s_14, A1=>nx1013, A2=>nx1015
);
reg_nx518 : and04 port map ( Y=>nx518, A0=>nx990, A1=>nx978, A2=>nx991,
   A3=>nx992);
reg_nx685 : nand02_2x port map ( Y=>nx685, A0=>cnt_s_15, A1=>nx518);
ix1083 : and04 port map ( Y=>nx979, A0=>cnt_s_9, A1=>nx1021, A2=>cnt_s_11,
   A3=>cnt_s_10);
ix1084 : and04 port map ( Y=>nx980, A0=>cnt_s_15, A1=>cnt_s_13, A2=>
   cnt_s_8, A3=>cnt_s_10);
ix1085 : and04 port map ( Y=>nx981, A0=>cnt_s_6, A1=>cnt_s_11, A2=>
   cnt_s_7, A3=>cnt_s_5);
ix1086 : nand02_2x port map ( Y=>nx982, A0=>nx980, A1=>nx981);
ix1087 : nand04_2x port map ( Y=>nx983, A0=>cnt_s_14, A1=>cnt_s_16, A2=>
   cnt_s_17, A3=>cnt_s_12);
ix1088 : and02 port map ( Y=>nx984, A0=>nx1013, A1=>nx1015);
ix1089 : and02 port map ( Y=>nx985, A0=>nx1017, A1=>nx1019);
ix1090 : and02 port map ( Y=>nx986, A0=>cnt_s_9, A1=>nx1021);
ix1091 : nand04_2x port map ( Y=>nx987, A0=>cnt_s_18, A1=>nx984, A2=>
   nx985, A3=>nx986);
reg_nx523 : nor03_2x port map ( Y=>nx523, A0=>nx982, A1=>nx983, A2=>nx987
);
ix1092 : and04 port map ( Y=>nx988, A0=>cnt_s_16, A1=>nx984, A2=>cnt_s_14,
   A3=>cnt_s_12);
ix1093 : and04 port map ( Y=>nx989, A0=>nx1017, A1=>nx1019, A2=>cnt_s_9,
```

```
   A3=>nx1021);
reg_nx521 : and04 port map ( Y=>nx521, A0=>nx980, A1=>nx988, A2=>nx981,
   A3=>nx989);
reg_nx667 : nand02_2x port map ( Y=>nx667, A0=>cnt_s_17, A1=>nx521);
ix1094 : and04 port map ( Y=>nx990, A0=>cnt_s_7, A1=>cnt_s_5, A2=>nx1017,
   A3=>nx1019);
ix1095 : and04 port map ( Y=>nx991, A0=>cnt_s_9, A1=>nx1021, A2=>cnt_s_8,
   A3=>cnt_s_6);
ix1096 : and04 port map ( Y=>nx992, A0=>cnt_s_10, A1=>cnt_s_11, A2=>
   cnt_s_12, A3=>cnt_s_13);
ix1097 : nor02ii port map ( Y=>nx993, A0=>nx974, A1=>cnt_s_19);
ix1098 : inv01 port map ( Y=>nx994, A=>nx973);
ix1099 : nand04_2x port map ( Y=>nx995, A0=>nx1131, A1=>nx993, A2=>nx961,
   A3=>nx994);
ix1100 : and04 port map ( Y=>nx996, A0=>nx1131, A1=>nx993, A2=>nx961, A3
   =>nx994);
ix1101 : and03 port map ( Y=>nx997, A0=>nx993, A1=>nx1131, A2=>nx994);
ix1102 : inv02 port map ( Y=>nx998, A=>cnt_s_19);
ix1103 : nor04_2x port map ( Y=>nx999, A0=>nx998, A1=>nx974, A2=>nx964,
   A3=>nx973);
reg_nx532 : and04 port map ( Y=>nx532, A0=>nx999, A1=>nx1131, A2=>
   cnt_s_24, A3=>cnt_s_23);
reg_nx868 : or02 port map ( Y=>nx868, A0=>nx532, A1=>cnt_s_25);
ix1104 : nor02_2x port map ( Y=>nx1000, A0=>nx964, A1=>nx973);
ix1105 : nor02ii port map ( Y=>nx1001, A0=>nx974, A1=>cnt_s_19);
reg_nx530 : and03 port map ( Y=>nx530, A0=>nx1000, A1=>nx1131, A2=>nx1001
);
reg_nx649 : nand02_2x port map ( Y=>nx649, A0=>cnt_s_19, A1=>nx1133);
ix1106 : nor04_2x port map ( Y=>nx1002, A0=>cnt_s_25, A1=>cnt_s_21, A2=>
   cnt_s_26, A3=>cnt_s_16);
ix1107 : nor04_2x port map ( Y=>nx1003, A0=>cnt_s_15, A1=>cnt_s_14, A2=>
   cnt_s_28, A3=>cnt_s_22);
ix1108 : nor04_2x port map ( Y=>nx1004, A0=>cnt_s_19, A1=>cnt_s_17, A2=>
   cnt_s_24, A3=>cnt_s_13);
ix1109 : nor04_2x port map ( Y=>nx1005, A0=>cnt_s_27, A1=>cnt_s_12, A2=>
   cnt_s_29, A3=>cnt_s_23);
ix1110 : nor04_2x port map ( Y=>nx1006, A0=>nx795, A1=>nx1015, A2=>nx1019,
   A3=>nx1013);
ix1111 : nor04_2x port map ( Y=>nx1007, A0=>cnt_s_30, A1=>cnt_s_18, A2=>
   cnt_s_31, A3=>cnt_s_20);
ix1112 : nor04_2x port map ( Y=>nx1008, A0=>cnt_s_9, A1=>nx735, A2=>
   cnt_s_11, A3=>cnt_s_10);
ix1113 : and04 port map ( Y=>nx1009, A0=>cnt_s_5, A1=>nx1021, A2=>cnt_s_7,
   A3=>cnt_s_6);
```

```
   ix1114 : nand04_2x port map ( Y=>nx1010, A0=>nx1006, A1=>nx1009, A2=>
      nx1005, A3=>nx1008);
   ix1115 : nand04_2x port map ( Y=>nx1011, A0=>nx1003, A1=>nx1004, A2=>
      nx1002, A3=>nx1007);
   reg_cnt_rdy : nor02_2x port map ( Y=>cnt_rdy_EXMPLR, A0=>nx1010, A1=>
      nx1011);
   ix1116 : buf16 port map ( Y=>nx1012, A=>cnt_s_1);
   ix1117 : buf16 port map ( Y=>nx1013, A=>cnt_s_1);
   ix1118 : buf16 port map ( Y=>nx1014, A=>cnt_s_0);
   ix1119 : buf16 port map ( Y=>nx1015, A=>cnt_s_0);
   ix1120 : buf16 port map ( Y=>nx1016, A=>cnt_s_2);
   ix1121 : buf16 port map ( Y=>nx1017, A=>cnt_s_2);
   ix1122 : buf16 port map ( Y=>nx1018, A=>cnt_s_3);
   ix1123 : buf16 port map ( Y=>nx1019, A=>cnt_s_3);
   ix1124 : buf16 port map ( Y=>nx1020, A=>cnt_s_4);
   ix1125 : buf16 port map ( Y=>nx1021, A=>cnt_s_4);
   ix1126 : buf16 port map ( Y=>nx1022, A=>nx500);
   ix1127 : buf16 port map ( Y=>nx1023, A=>nx500);
   ix1128 : buf02 port map ( Y=>nx1129, A=>nx564);
   ix1130 : buf02 port map ( Y=>nx1131, A=>nx523);
   ix1132 : buf02 port map ( Y=>nx1133, A=>nx523);
end arch ;

library IEEE;
use IEEE.STD_LOGIC_1164.all;

entity fsm_guru is
   port (
      clk : IN std_logic ;
      res : IN std_logic ;
      fsm_sg_start : IN std_logic ;
      end_of_guru : IN std_logic ;
      cnt_guru_rdy : IN std_logic ;
      duo_formed : IN std_logic ;
      go_guru : IN std_logic ;
      flags_2_dp_ng_cte_incr : OUT std_logic ;
      flags_2_dp_ng_rand_zero : OUT std_logic ;
      flags_2_dp_alu_ctrl : OUT std_logic ;
      flags_2_dp_rb_INIT_en : OUT std_logic ;
      flags_2_dp_rb_GURU_en : OUT std_logic ;
      flags_2_dp_rb_PRE_GURU_en : OUT std_logic ;
      flags_2_dp_rb_out_sel_4 : OUT std_logic ;
      flags_2_dp_rb_out_sel_3 : OUT std_logic ;
      flags_2_dp_rb_out_sel_2 : OUT std_logic ;
```

```
      flags_2_dp_rb_out_sel_1 : OUT std_logic ;
      flags_2_dp_rb_out_sel_0 : OUT std_logic ;
      flags_2_dp_cg_sel_1 : OUT std_logic ;
      flags_2_dp_cg_sel_0 : OUT std_logic ;
      flags_2_mem_mem_a_addr_5 : OUT std_logic ;
      flags_2_mem_mem_a_addr_4 : OUT std_logic ;
      flags_2_mem_mem_a_addr_3 : OUT std_logic ;
      flags_2_mem_mem_a_addr_2 : OUT std_logic ;
      flags_2_mem_mem_a_addr_1 : OUT std_logic ;
      flags_2_mem_mem_a_addr_0 : OUT std_logic ;
      flags_2_mem_mem_wr_en : OUT std_logic ;
      flags_2_mem_data_a_7 : OUT std_logic ;
      flags_2_mem_data_a_6 : OUT std_logic ;
      flags_2_mem_data_a_5 : OUT std_logic ;
      flags_2_mem_data_a_4 : OUT std_logic ;
      flags_2_mem_data_a_3 : OUT std_logic ;
      flags_2_mem_data_a_2 : OUT std_logic ;
      flags_2_mem_data_a_1 : OUT std_logic ;
      flags_2_mem_data_a_0 : OUT std_logic ;
      flags_2_mem_cg_sel_1 : OUT std_logic ;
      flags_2_mem_cg_sel_0 : OUT std_logic) ;
end fsm_guru ;

architecture arch_unfold_1626 of fsm_guru is
   signal flags_2_dp_rb_PRE_GURU_en_EXMPLR, flags_2_mem_cg_sel_0_EXMPLR,
      flags_2_dp_alu_ctrl_EXMPLR, flags_2_dp_rb_out_sel_1_EXMPLR,
      flags_2_mem_cg_sel_1_EXMPLR, STATE_8, STATE_3, nx8, nx20, STATE_2,
      STATE_1, STATE_0, STATE_9, nx30, nx40, nx44, nx56, nx66, nx84, nx96,
      nx108, nx124, nx138, nx64, nx73, nx79, nx81, nx87, nx89, nx93, nx101,
      nx104, nx107, nx113, nx115, nx116, nx152, nx155, nx157: std_logic ;

begin
   flags_2_dp_ng_cte_incr <= flags_2_dp_alu_ctrl_EXMPLR ;
   flags_2_dp_ng_rand_zero <= flags_2_mem_cg_sel_1_EXMPLR ;
   flags_2_dp_alu_ctrl <= flags_2_dp_alu_ctrl_EXMPLR ;
   flags_2_dp_rb_GURU_en <= flags_2_dp_rb_PRE_GURU_en_EXMPLR ;
   flags_2_dp_rb_PRE_GURU_en <= flags_2_dp_rb_PRE_GURU_en_EXMPLR ;
   flags_2_dp_rb_out_sel_4 <= flags_2_mem_cg_sel_1_EXMPLR ;
   flags_2_dp_rb_out_sel_3 <= flags_2_mem_cg_sel_1_EXMPLR ;
   flags_2_dp_rb_out_sel_1 <= flags_2_dp_rb_out_sel_1_EXMPLR ;
   flags_2_dp_rb_out_sel_0 <= flags_2_mem_cg_sel_1_EXMPLR ;
   flags_2_dp_cg_sel_0 <= flags_2_mem_cg_sel_0_EXMPLR ;
   flags_2_mem_cg_sel_1 <= flags_2_mem_cg_sel_1_EXMPLR ;
   flags_2_mem_cg_sel_0 <= flags_2_mem_cg_sel_0_EXMPLR ;
```

```
ix65 : fake_vcc port map ( Y=>nx64);
ix52 : fake_gnd port map ( Y=>flags_2_mem_cg_sel_1_EXMPLR);
reg_STATE_9 : dff port map ( Q=>STATE_9, QB=>OPEN, D=>nx30, CLK=>clk);
ix31 : and04 port map ( Y=>nx30, A0=>nx73, A1=>STATE_8, A2=>go_guru, A3=>
   end_of_guru);
ix74 : inv01 port map ( Y=>nx73, A=>res);
reg_STATE_8 : dff port map ( Q=>STATE_8, QB=>OPEN, D=>nx108, CLK=>clk);
ix109 : oai22 port map ( Y=>nx108, A0=>go_guru, A1=>nx79, B0=>res, B1=>
   nx81);
ix80 : nand02 port map ( Y=>nx79, A0=>nx73, A1=>STATE_8);
reg_STATE_4 : dff port map ( Q=>OPEN, QB=>nx81, D=>nx96, CLK=>clk);
ix97 : and03 port map ( Y=>nx96, A0=>STATE_3, A1=>nx73, A2=>cnt_guru_rdy
);
reg_STATE_3 : dff port map ( Q=>STATE_3, QB=>OPEN, D=>nx84, CLK=>clk);
ix85 : aoi21 port map ( Y=>nx84, A0=>nx87, A1=>nx104, B0=>res);
ix88 : aoi21 port map ( Y=>nx87, A0=>nx89, A1=>STATE_3, B0=>STATE_2);
ix90 : inv01 port map ( Y=>nx89, A=>cnt_guru_rdy);
reg_STATE_2 : dff port map ( Q=>STATE_2, QB=>OPEN, D=>nx66, CLK=>clk);
reg_STATE_1 : dff port map ( Q=>STATE_1, QB=>nx93, D=>nx56, CLK=>clk);
ix45 : or03 port map ( Y=>nx44, A0=>nx40, A1=>STATE_9, A2=>res);
reg_STATE_0 : dff port map ( Q=>STATE_0, QB=>nx101, D=>nx44, CLK=>clk);
reg_STATE_10 : dff port map ( Q=>OPEN, QB=>nx104, D=>nx20, CLK=>clk);
ix21 : aoi21 port map ( Y=>nx20, A0=>nx107, A1=>nx116, B0=>res);
reg_STATE_6 : dff port map ( Q=>flags_2_dp_cg_sel_1, QB=>nx107, D=>nx8,
   CLK=>clk);
reg_STATE_5 : dff port map ( Q=>OPEN, QB=>nx115, D=>nx124, CLK=>clk);
ix125 : nor03_2x port map ( Y=>nx124, A0=>nx79, A1=>nx113, A2=>
   end_of_guru);
ix114 : inv01 port map ( Y=>nx113, A=>go_guru);
reg_STATE_7 : dff port map ( Q=>OPEN, QB=>nx116, D=>nx138, CLK=>clk);
ix139 : nor03_2x port map ( Y=>nx138, A0=>nx115, A1=>res, A2=>duo_formed
);
ix169 : nor04 port map ( Y=>flags_2_dp_alu_ctrl_EXMPLR, A0=>STATE_3, A1=>
   STATE_2, A2=>STATE_1, A3=>STATE_0);
tri_flags_2_mem_data_a_0 : tri01 port map ( Y=>flags_2_mem_data_a_0, A=>
   nx64, E=>flags_2_mem_cg_sel_1_EXMPLR);
tri_flags_2_mem_data_a_1 : tri01 port map ( Y=>flags_2_mem_data_a_1, A=>
   nx64, E=>flags_2_mem_cg_sel_1_EXMPLR);
tri_flags_2_mem_data_a_2 : tri01 port map ( Y=>flags_2_mem_data_a_2, A=>
   nx64, E=>flags_2_mem_cg_sel_1_EXMPLR);
tri_flags_2_mem_data_a_3 : tri01 port map ( Y=>flags_2_mem_data_a_3, A=>
   nx64, E=>flags_2_mem_cg_sel_1_EXMPLR);
tri_flags_2_mem_data_a_4 : tri01 port map ( Y=>flags_2_mem_data_a_4, A=>
   nx64, E=>flags_2_mem_cg_sel_1_EXMPLR);
```

```
   tri_flags_2_mem_data_a_5 : tri01 port map ( Y=>flags_2_mem_data_a_5, A=>
      nx64, E=>flags_2_mem_cg_sel_1_EXMPLR);
   tri_flags_2_mem_data_a_6 : tri01 port map ( Y=>flags_2_mem_data_a_6, A=>
      nx64, E=>flags_2_mem_cg_sel_1_EXMPLR);
   tri_flags_2_mem_data_a_7 : tri01 port map ( Y=>flags_2_mem_data_a_7, A=>
      nx64, E=>flags_2_mem_cg_sel_1_EXMPLR);
   tri_flags_2_mem_mem_a_addr_0 : tri01 port map ( Y=>
      flags_2_mem_mem_a_addr_0, A=>nx64, E=>flags_2_mem_cg_sel_1_EXMPLR);
   tri_flags_2_mem_mem_a_addr_1 : tri01 port map ( Y=>
      flags_2_mem_mem_a_addr_1, A=>nx64, E=>flags_2_mem_cg_sel_1_EXMPLR);
   tri_flags_2_mem_mem_a_addr_2 : tri01 port map ( Y=>
      flags_2_mem_mem_a_addr_2, A=>nx64, E=>flags_2_mem_cg_sel_1_EXMPLR);
   tri_flags_2_mem_mem_a_addr_3 : tri01 port map ( Y=>
      flags_2_mem_mem_a_addr_3, A=>nx64, E=>flags_2_mem_cg_sel_1_EXMPLR);
   tri_flags_2_mem_mem_a_addr_4 : tri01 port map ( Y=>
      flags_2_mem_mem_a_addr_4, A=>nx64, E=>flags_2_mem_cg_sel_1_EXMPLR);
   tri_flags_2_mem_mem_a_addr_5 : tri01 port map ( Y=>
      flags_2_mem_mem_a_addr_5, A=>nx64, E=>flags_2_mem_cg_sel_1_EXMPLR);
   tri_flags_2_dp_rb_INIT_en : tri01 port map ( Y=>flags_2_dp_rb_INIT_en, A
      =>nx64, E=>flags_2_mem_cg_sel_1_EXMPLR);
   ix149 : inv01 port map ( Y=>flags_2_dp_rb_out_sel_2, A=>
      flags_2_dp_rb_out_sel_1_EXMPLR);
   ix70 : nor02ii port map ( Y=>flags_2_dp_rb_out_sel_1_EXMPLR, A0=>STATE_9,
      A1=>nx104);
   ix67 : nor02ii port map ( Y=>nx66, A0=>res, A1=>STATE_1);
   ix57 : nor03_2x port map ( Y=>nx56, A0=>nx101, A1=>res, A2=>nx152);
   ix151 : inv01 port map ( Y=>nx152, A=>fsm_sg_start);
   ix41 : nor02ii port map ( Y=>nx40, A0=>fsm_sg_start, A1=>STATE_0);
   ix9 : nor03_2x port map ( Y=>nx8, A0=>nx115, A1=>res, A2=>nx155);
   ix154 : inv01 port map ( Y=>nx155, A=>duo_formed);
   ix175 : and02 port map ( Y=>flags_2_mem_cg_sel_0_EXMPLR, A0=>nx101, A1=>
      flags_2_dp_rb_out_sel_1_EXMPLR);
   ix153 : nand04 port map ( Y=>flags_2_mem_mem_wr_en, A0=>nx107, A1=>
      flags_2_dp_rb_out_sel_1_EXMPLR, A2=>nx157, A3=>nx116);
   ix156 : inv01 port map ( Y=>nx157, A=>STATE_2);
   ix177 : nand02 port map ( Y=>flags_2_dp_rb_PRE_GURU_en_EXMPLR, A0=>nx93,
      A1=>nx81);
end arch_unfold_1626 ;

library IEEE;
use IEEE.STD_LOGIC_1164.all;

entity base_control is
   port (
```

```
      clk : IN std_logic ;
      res : IN std_logic ;
      en_disc : IN std_logic ;
      cnt_guru_rdy : IN std_logic ;
      dp_2_ctrl : IN std_logic_vector (1 DOWNTO 0) ;
      disc_2_base : IN std_logic_vector (0 DOWNTO 0) ;
      ref_2_base : IN std_logic_vector (1 DOWNTO 0) ;
      en_cnt_step : OUT std_logic ;
      start_step : OUT std_logic ;
      ctrl_2_dp_ng_cte_incr : OUT std_logic ;
      ctrl_2_dp_ng_rand_zero : OUT std_logic ;
      ctrl_2_dp_alu_ctrl : OUT std_logic ;
      ctrl_2_dp_rb_INIT_en : OUT std_logic ;
      ctrl_2_dp_rb_GURU_en : OUT std_logic ;
      ctrl_2_dp_rb_PRE_GURU_en : OUT std_logic ;
      ctrl_2_dp_rb_out_sel_4 : OUT std_logic ;
      ctrl_2_dp_rb_out_sel_3 : OUT std_logic ;
      ctrl_2_dp_rb_out_sel_2 : OUT std_logic ;
      ctrl_2_dp_rb_out_sel_1 : OUT std_logic ;
      ctrl_2_dp_rb_out_sel_0 : OUT std_logic ;
      ctrl_2_dp_cg_sel_1 : OUT std_logic ;
      ctrl_2_dp_cg_sel_0 : OUT std_logic ;
      ctrl_2_mem_mem_a_addr_5 : OUT std_logic ;
      ctrl_2_mem_mem_a_addr_4 : OUT std_logic ;
      ctrl_2_mem_mem_a_addr_3 : OUT std_logic ;
      ctrl_2_mem_mem_a_addr_2 : OUT std_logic ;
      ctrl_2_mem_mem_a_addr_1 : OUT std_logic ;
      ctrl_2_mem_mem_a_addr_0 : OUT std_logic ;
      ctrl_2_mem_mem_wr_en : OUT std_logic ;
      ctrl_2_mem_data_a_7 : OUT std_logic ;
      ctrl_2_mem_data_a_6 : OUT std_logic ;
      ctrl_2_mem_data_a_5 : OUT std_logic ;
      ctrl_2_mem_data_a_4 : OUT std_logic ;
      ctrl_2_mem_data_a_3 : OUT std_logic ;
      ctrl_2_mem_data_a_2 : OUT std_logic ;
      ctrl_2_mem_data_a_1 : OUT std_logic ;
      ctrl_2_mem_data_a_0 : OUT std_logic ;
      ctrl_2_mem_cg_sel_1 : OUT std_logic ;
      ctrl_2_mem_cg_sel_0 : OUT std_logic) ;
end base_control ;

architecture arch of base_control is
   component counter_trigger_500
      port (
```

```
        clk : IN std_logic ;
        res : IN std_logic ;
        trigger : IN std_logic ;
        cnt_rdy : OUT std_logic) ;
  end component ;
  component fsm_guru
     port (
        clk : IN std_logic ;
        res : IN std_logic ;
        fsm_sg_start : IN std_logic ;
        end_of_guru : IN std_logic ;
        cnt_guru_rdy : IN std_logic ;
        duo_formed : IN std_logic ;
        go_guru : IN std_logic ;
        flags_2_dp_ng_cte_incr : OUT std_logic ;
        flags_2_dp_ng_rand_zero : OUT std_logic ;
        flags_2_dp_alu_ctrl : OUT std_logic ;
        flags_2_dp_rb_INIT_en : OUT std_logic ;
        flags_2_dp_rb_GURU_en : OUT std_logic ;
        flags_2_dp_rb_PRE_GURU_en : OUT std_logic ;
        flags_2_dp_rb_out_sel_4 : OUT std_logic ;
        flags_2_dp_rb_out_sel_3 : OUT std_logic ;
        flags_2_dp_rb_out_sel_2 : OUT std_logic ;
        flags_2_dp_rb_out_sel_1 : OUT std_logic ;
        flags_2_dp_rb_out_sel_0 : OUT std_logic ;
        flags_2_dp_cg_sel_1 : OUT std_logic ;
        flags_2_dp_cg_sel_0 : OUT std_logic ;
        flags_2_mem_mem_a_addr_5 : OUT std_logic ;
        flags_2_mem_mem_a_addr_4 : OUT std_logic ;
        flags_2_mem_mem_a_addr_3 : OUT std_logic ;
        flags_2_mem_mem_a_addr_2 : OUT std_logic ;
        flags_2_mem_mem_a_addr_1 : OUT std_logic ;
        flags_2_mem_mem_a_addr_0 : OUT std_logic ;
        flags_2_mem_mem_wr_en : OUT std_logic ;
        flags_2_mem_data_a_7 : OUT std_logic ;
        flags_2_mem_data_a_6 : OUT std_logic ;
        flags_2_mem_data_a_5 : OUT std_logic ;
        flags_2_mem_data_a_4 : OUT std_logic ;
        flags_2_mem_data_a_3 : OUT std_logic ;
        flags_2_mem_data_a_2 : OUT std_logic ;
        flags_2_mem_data_a_1 : OUT std_logic ;
        flags_2_mem_data_a_0 : OUT std_logic ;
        flags_2_mem_cg_sel_1 : OUT std_logic ;
        flags_2_mem_cg_sel_0 : OUT std_logic) ;
```

```
   end component ;
   signal en_cnt_step_EXMPLR, start_step_EXMPLR,
      ctrl_2_dp_ng_cte_incr_EXMPLR, ctrl_2_dp_ng_rand_zero_EXMPLR,
      ctrl_2_mem_cg_sel_1_EXMPLR, ctrl_2_mem_cg_sel_0_EXMPLR,
      ctrl_2_dp_rb_out_sel_0_EXMPLR, cnt_prepare_i_s, cnt_start_i_s,
      cnt_prepare_f_s, cnt_start_f_s, init_2_dp_s_rb_GURU_en,
      init_2_dp_s_rb_PRE_GURU_en, init_2_dp_s_cg_sel_1, init_2_dp_s_cg_sel_0,
      guru_2_dp_s_ng_cte_incr, guru_2_dp_s_rb_INIT_en,
      guru_2_dp_s_rb_GURU_en, guru_2_dp_s_rb_out_sel_2,
      guru_2_dp_s_rb_out_sel_1, guru_2_dp_s_cg_sel_1, guru_2_dp_s_cg_sel_0,
      init_2_mem_s_mem_a_addr_5, init_2_mem_s_mem_a_addr_4,
      init_2_mem_s_mem_a_addr_3, init_2_mem_s_mem_a_addr_2,
      init_2_mem_s_mem_a_addr_1, init_2_mem_s_mem_a_addr_0,
      init_2_mem_s_data_a_7, init_2_mem_s_data_a_6, init_2_mem_s_data_a_5,
      init_2_mem_s_data_a_4, init_2_mem_s_data_a_3, init_2_mem_s_data_a_2,
      init_2_mem_s_data_a_1, init_2_mem_s_data_a_0,
      guru_2_mem_s_mem_a_addr_5, guru_2_mem_s_mem_a_addr_4,
      guru_2_mem_s_mem_a_addr_3, guru_2_mem_s_mem_a_addr_2,
      guru_2_mem_s_mem_a_addr_1, guru_2_mem_s_mem_a_addr_0,
      guru_2_mem_s_mem_wr_en, guru_2_mem_s_data_a_7, guru_2_mem_s_data_a_6,
      guru_2_mem_s_data_a_5, guru_2_mem_s_data_a_4, guru_2_mem_s_data_a_3,
      guru_2_mem_s_data_a_2, guru_2_mem_s_data_a_1, guru_2_mem_s_data_a_0,
      ctrl_2_dp_rb_out_sel_3_EXMPLR, init_2_dp_s_ng_cte_incr, nx499,
      init_STATE_0, nx14, nx24, nx28, nx44, nx240, nx501, nx266, nx270,
      main_STATE_3, nx292, nx296, nx502, nx320, nx505, nx511, nx513, nx519,
      nx521, nx523, nx528, nx531, nx536, nx540, nx542, nx546, nx553, nx555,
      nx609, nx611, nx619, nx623, nx625, nx631, nx633, nx635, nx637, nx639:
   std_logic ;

   signal DANGLING : std_logic_vector (7 downto 0 );

begin
   en_cnt_step <= en_cnt_step_EXMPLR ;
   start_step <= start_step_EXMPLR ;
   ctrl_2_dp_ng_cte_incr <= ctrl_2_dp_ng_cte_incr_EXMPLR ;
   ctrl_2_dp_ng_rand_zero <= ctrl_2_dp_ng_rand_zero_EXMPLR ;
   ctrl_2_dp_rb_out_sel_4 <= ctrl_2_dp_rb_out_sel_3_EXMPLR ;
   ctrl_2_dp_rb_out_sel_3 <= ctrl_2_dp_rb_out_sel_3_EXMPLR ;
   ctrl_2_dp_rb_out_sel_0 <= ctrl_2_dp_rb_out_sel_0_EXMPLR ;
   ctrl_2_mem_cg_sel_1 <= ctrl_2_mem_cg_sel_1_EXMPLR ;
   ctrl_2_mem_cg_sel_0 <= ctrl_2_mem_cg_sel_0_EXMPLR ;
   cnt_prep : counter_trigger_500 port map ( clk=>clk, res=>res, trigger=>
      cnt_prepare_i_s, cnt_rdy=>cnt_prepare_f_s);
   cnt_strat : counter_trigger_500 port map ( clk=>clk, res=>res, trigger=>
```

```
    cnt_start_i_s, cnt_rdy=>cnt_start_f_s);
guru : fsm_guru port map ( clk=>clk, res=>res, fsm_sg_start=>
    start_step_EXMPLR, end_of_guru=>dp_2_ctrl(1), cnt_guru_rdy=>
    cnt_guru_rdy, duo_formed=>ref_2_base(1), go_guru=>ref_2_base(0),
    flags_2_dp_ng_cte_incr=>guru_2_dp_s_ng_cte_incr,
    flags_2_dp_ng_rand_zero=>DANGLING(0), flags_2_dp_alu_ctrl=>DANGLING(1),
    flags_2_dp_rb_INIT_en=>guru_2_dp_s_rb_INIT_en, flags_2_dp_rb_GURU_en=>
    guru_2_dp_s_rb_GURU_en, flags_2_dp_rb_PRE_GURU_en=>DANGLING(2),
    flags_2_dp_rb_out_sel_4=>DANGLING(3), flags_2_dp_rb_out_sel_3=>
    DANGLING(4), flags_2_dp_rb_out_sel_2=>guru_2_dp_s_rb_out_sel_2,
    flags_2_dp_rb_out_sel_1=>guru_2_dp_s_rb_out_sel_1,
    flags_2_dp_rb_out_sel_0=>DANGLING(5), flags_2_dp_cg_sel_1=>
    guru_2_dp_s_cg_sel_1, flags_2_dp_cg_sel_0=>guru_2_dp_s_cg_sel_0,
    flags_2_mem_mem_a_addr_5=>guru_2_mem_s_mem_a_addr_5,
    flags_2_mem_mem_a_addr_4=>guru_2_mem_s_mem_a_addr_4,
    flags_2_mem_mem_a_addr_3=>guru_2_mem_s_mem_a_addr_3,
    flags_2_mem_mem_a_addr_2=>guru_2_mem_s_mem_a_addr_2,
    flags_2_mem_mem_a_addr_1=>guru_2_mem_s_mem_a_addr_1,
    flags_2_mem_mem_a_addr_0=>guru_2_mem_s_mem_a_addr_0,
    flags_2_mem_mem_wr_en=>guru_2_mem_s_mem_wr_en, flags_2_mem_data_a_7=>
    guru_2_mem_s_data_a_7, flags_2_mem_data_a_6=>guru_2_mem_s_data_a_6,
    flags_2_mem_data_a_5=>guru_2_mem_s_data_a_5, flags_2_mem_data_a_4=>
    guru_2_mem_s_data_a_4, flags_2_mem_data_a_3=>guru_2_mem_s_data_a_3,
    flags_2_mem_data_a_2=>guru_2_mem_s_data_a_2, flags_2_mem_data_a_1=>
    guru_2_mem_s_data_a_1, flags_2_mem_data_a_0=>guru_2_mem_s_data_a_0,
    flags_2_mem_cg_sel_1=>DANGLING(6), flags_2_mem_cg_sel_0=>DANGLING(7));
ix506 : fake_vcc port map ( Y=>nx505);
ix444 : fake_gnd port map ( Y=>ctrl_2_dp_rb_out_sel_3_EXMPLR);
main_reg_STATE_5 : dff port map ( Q=>cnt_start_i_s, QB=>OPEN, D=>nx240,
    CLK=>clk);
ix241 : nor02_2x port map ( Y=>nx240, A0=>res, A1=>nx511);
ix512 : aoi21 port map ( Y=>nx511, A0=>nx513, A1=>cnt_start_i_s, B0=>
    start_step_EXMPLR);
ix514 : inv01 port map ( Y=>nx513, A=>cnt_start_f_s);
main_reg_STATE_1 : dff port map ( Q=>start_step_EXMPLR, QB=>OPEN, D=>
    nx502, CLK=>clk);
main_reg_STATE_4 : dff port map ( Q=>cnt_prepare_i_s, QB=>OPEN, D=>nx320,
    CLK=>clk);
ix321 : oai32 port map ( Y=>nx320, A0=>nx519, A1=>ref_2_base(1), A2=>
    nx521, B0=>res, B1=>nx536);
ix520 : inv01 port map ( Y=>nx519, A=>dp_2_ctrl(1));
ix522 : oai21 port map ( Y=>nx521, A0=>nx523, A1=>disc_2_base(0), B0=>
    nx501);
ix524 : inv01 port map ( Y=>nx523, A=>en_disc);
```

```
ix281 : nor02ii port map ( Y=>nx501, A0=>res, A1=>en_cnt_step_EXMPLR);
main_reg_STATE_2 : dff port map ( Q=>en_cnt_step_EXMPLR, QB=>OPEN, D=>
   nx270, CLK=>clk);
ix271 : ao32 port map ( Y=>nx270, A0=>cnt_start_i_s, A1=>nx528, A2=>
   cnt_start_f_s, B0=>nx501, B1=>nx266);
ix529 : inv01 port map ( Y=>nx528, A=>res);
ix267 : nand02 port map ( Y=>nx266, A0=>nx531, A1=>dp_2_ctrl(1));
ix537 : aoi321 port map ( Y=>nx536, A0=>init_STATE_0, A1=>
   init_2_dp_s_ng_cte_incr, A2=>nx619, B0=>nx555, B1=>cnt_prepare_i_s, C0
   =>main_STATE_3);
ix15 : nor02_2x port map ( Y=>nx14, A0=>res, A1=>nx540);
ix541 : aoi32 port map ( Y=>nx540, A0=>nx542, A1=>dp_2_ctrl(0), A2=>
   init_2_dp_s_ng_cte_incr, B0=>nx619, B1=>nx553);
init_reg_STATE_0 : dff port map ( Q=>init_STATE_0, QB=>nx542, D=>nx14,
   CLK=>clk);
init_reg_STATE_1 : dff port map ( Q=>init_2_dp_s_ng_cte_incr, QB=>OPEN, D
   =>nx28, CLK=>clk);
ix29 : nor02_2x port map ( Y=>nx28, A0=>res, A1=>nx546);
ix547 : oai21 port map ( Y=>nx546, A0=>init_STATE_0, A1=>
   init_2_dp_s_ng_cte_incr, B0=>nx499);
ix41 : nand02 port map ( Y=>nx499, A0=>init_STATE_0, A1=>
   init_2_dp_s_ng_cte_incr);
main_reg_STATE_0 : dff port map ( Q=>ctrl_2_dp_rb_out_sel_0_EXMPLR, QB=>
   OPEN, D=>nx44, CLK=>clk);
ix45 : ao21 port map ( Y=>nx44, A0=>nx499, A1=>nx619, B0=>res);
ix556 : nand03 port map ( Y=>nx555, A0=>cnt_prepare_i_s, A1=>nx528, A2=>
   cnt_prepare_f_s);
main_reg_STATE_3 : dff port map ( Q=>main_STATE_3, QB=>OPEN, D=>nx296,
   CLK=>clk);
ix297 : and03 port map ( Y=>nx296, A0=>nx292, A1=>ref_2_base(1), A2=>
   nx501);
ix293 : and03 port map ( Y=>nx292, A0=>en_disc, A1=>disc_2_base(0), A2=>
   dp_2_ctrl(1));
init_tri_flags_2_mem_data_a_0 : tri01 port map ( Y=>init_2_mem_s_data_a_0,
   A=>nx505, E=>ctrl_2_dp_rb_out_sel_3_EXMPLR);
init_tri_flags_2_mem_data_a_1 : tri01 port map ( Y=>init_2_mem_s_data_a_1,
   A=>nx505, E=>ctrl_2_dp_rb_out_sel_3_EXMPLR);
init_tri_flags_2_mem_data_a_2 : tri01 port map ( Y=>init_2_mem_s_data_a_2,
   A=>nx505, E=>ctrl_2_dp_rb_out_sel_3_EXMPLR);
init_tri_flags_2_mem_data_a_3 : tri01 port map ( Y=>init_2_mem_s_data_a_3,
   A=>nx505, E=>ctrl_2_dp_rb_out_sel_3_EXMPLR);
init_tri_flags_2_mem_data_a_4 : tri01 port map ( Y=>init_2_mem_s_data_a_4,
   A=>nx505, E=>ctrl_2_dp_rb_out_sel_3_EXMPLR);
init_tri_flags_2_mem_data_a_5 : tri01 port map ( Y=>init_2_mem_s_data_a_5,
```

```
   A=>nx505, E=>ctrl_2_dp_rb_out_sel_3_EXMPLR);
init_tri_flags_2_mem_data_a_6 : tri01 port map ( Y=>init_2_mem_s_data_a_6,
   A=>nx505, E=>ctrl_2_dp_rb_out_sel_3_EXMPLR);
init_tri_flags_2_mem_data_a_7 : tri01 port map ( Y=>init_2_mem_s_data_a_7,
   A=>nx505, E=>ctrl_2_dp_rb_out_sel_3_EXMPLR);
ix125 : ao22 port map ( Y=>ctrl_2_mem_mem_wr_en, A0=>
   guru_2_mem_s_mem_wr_en, A1=>nx633, B0=>nx24, B1=>
   ctrl_2_dp_ng_rand_zero_EXMPLR);
init_tri_flags_2_mem_mem_a_addr_0 : tri01 port map ( Y=>
   init_2_mem_s_mem_a_addr_0, A=>nx505, E=>ctrl_2_dp_rb_out_sel_3_EXMPLR
);
init_tri_flags_2_mem_mem_a_addr_1 : tri01 port map ( Y=>
   init_2_mem_s_mem_a_addr_1, A=>nx505, E=>ctrl_2_dp_rb_out_sel_3_EXMPLR
);
init_tri_flags_2_mem_mem_a_addr_2 : tri01 port map ( Y=>
   init_2_mem_s_mem_a_addr_2, A=>nx505, E=>ctrl_2_dp_rb_out_sel_3_EXMPLR
);
init_tri_flags_2_mem_mem_a_addr_3 : tri01 port map ( Y=>
   init_2_mem_s_mem_a_addr_3, A=>nx505, E=>ctrl_2_dp_rb_out_sel_3_EXMPLR
);
init_tri_flags_2_mem_mem_a_addr_4 : tri01 port map ( Y=>
   init_2_mem_s_mem_a_addr_4, A=>nx505, E=>ctrl_2_dp_rb_out_sel_3_EXMPLR
);
init_tri_flags_2_mem_mem_a_addr_5 : tri01 port map ( Y=>
   init_2_mem_s_mem_a_addr_5, A=>nx505, E=>ctrl_2_dp_rb_out_sel_3_EXMPLR
);
ix181 : ao21 port map ( Y=>ctrl_2_dp_cg_sel_0, A0=>init_2_dp_s_cg_sel_0,
   A1=>nx623, B0=>ctrl_2_mem_cg_sel_0_EXMPLR);
init_tri_flags_2_dp_cg_sel_0 : tri01 port map ( Y=>init_2_dp_s_cg_sel_0,
   A=>nx505, E=>ctrl_2_dp_rb_out_sel_3_EXMPLR);
ix189 : ao21 port map ( Y=>ctrl_2_dp_cg_sel_1, A0=>init_2_dp_s_cg_sel_1,
   A1=>nx625, B0=>ctrl_2_mem_cg_sel_1_EXMPLR);
init_tri_flags_2_dp_cg_sel_1 : tri01 port map ( Y=>init_2_dp_s_cg_sel_1,
   A=>nx505, E=>ctrl_2_dp_rb_out_sel_3_EXMPLR);
init_tri_flags_2_dp_rb_PRE_GURU_en : tri01 port map ( Y=>
   init_2_dp_s_rb_PRE_GURU_en, A=>nx505, E=>ctrl_2_dp_rb_out_sel_3_EXMPLR
);
init_tri_flags_2_dp_rb_GURU_en : tri01 port map ( Y=>
   init_2_dp_s_rb_GURU_en, A=>nx505, E=>ctrl_2_dp_rb_out_sel_3_EXMPLR);
ix213 : ao22 port map ( Y=>ctrl_2_dp_rb_INIT_en, A0=>
   guru_2_dp_s_rb_INIT_en, A1=>nx633, B0=>nx24, B1=>
   ctrl_2_dp_ng_rand_zero_EXMPLR);
ix227 : aoi21 port map ( Y=>ctrl_2_dp_alu_ctrl, A0=>nx625, A1=>nx609, B0
   =>nx611);
```

```
ix333 : inv01 port map ( Y=>nx502, A=>nx555);
ix25 : inv01 port map ( Y=>nx24, A=>nx546);
ix610 : inv01 port map ( Y=>nx609, A=>nx499);
ix612 : inv01 port map ( Y=>nx611, A=>ctrl_2_dp_ng_cte_incr_EXMPLR);
ix618 : inv02 port map ( Y=>nx619, A=>nx633);
ix622 : inv02 port map ( Y=>nx623, A=>nx633);
ix624 : inv02 port map ( Y=>nx625, A=>nx633);
ix532 : mux21_ni port map ( Y=>nx531, A0=>nx631, A1=>disc_2_base(0), S0=>
   en_disc);
ix630 : inv01 port map ( Y=>nx631, A=>ref_2_base(1));
ix554 : nor02ii port map ( Y=>nx553, A0=>init_2_dp_s_ng_cte_incr, A1=>
   nx542);
ix177 : and02 port map ( Y=>ctrl_2_mem_cg_sel_0_EXMPLR, A0=>nx633, A1=>
   guru_2_dp_s_cg_sel_0);
ix185 : and02 port map ( Y=>ctrl_2_mem_cg_sel_1_EXMPLR, A0=>nx633, A1=>
   guru_2_dp_s_cg_sel_1);
ix59 : mux21_ni port map ( Y=>ctrl_2_mem_data_a_0, A0=>
   init_2_mem_s_data_a_0, A1=>guru_2_mem_s_data_a_0, S0=>nx635);
ix67 : mux21_ni port map ( Y=>ctrl_2_mem_data_a_1, A0=>
   init_2_mem_s_data_a_1, A1=>guru_2_mem_s_data_a_1, S0=>nx635);
ix75 : mux21_ni port map ( Y=>ctrl_2_mem_data_a_2, A0=>
   init_2_mem_s_data_a_2, A1=>guru_2_mem_s_data_a_2, S0=>nx635);
ix83 : mux21_ni port map ( Y=>ctrl_2_mem_data_a_3, A0=>
   init_2_mem_s_data_a_3, A1=>guru_2_mem_s_data_a_3, S0=>nx635);
ix91 : mux21_ni port map ( Y=>ctrl_2_mem_data_a_4, A0=>
   init_2_mem_s_data_a_4, A1=>guru_2_mem_s_data_a_4, S0=>nx635);
ix99 : mux21_ni port map ( Y=>ctrl_2_mem_data_a_5, A0=>
   init_2_mem_s_data_a_5, A1=>guru_2_mem_s_data_a_5, S0=>nx635);
ix107 : mux21_ni port map ( Y=>ctrl_2_mem_data_a_6, A0=>
   init_2_mem_s_data_a_6, A1=>guru_2_mem_s_data_a_6, S0=>nx635);
ix115 : mux21_ni port map ( Y=>ctrl_2_mem_data_a_7, A0=>
   init_2_mem_s_data_a_7, A1=>guru_2_mem_s_data_a_7, S0=>nx637);
ix121 : nor02_2x port map ( Y=>ctrl_2_dp_ng_rand_zero_EXMPLR, A0=>nx553,
   A1=>nx637);
ix133 : mux21_ni port map ( Y=>ctrl_2_mem_mem_a_addr_0, A0=>
   init_2_mem_s_mem_a_addr_0, A1=>guru_2_mem_s_mem_a_addr_0, S0=>nx637);
ix141 : mux21_ni port map ( Y=>ctrl_2_mem_mem_a_addr_1, A0=>
   init_2_mem_s_mem_a_addr_1, A1=>guru_2_mem_s_mem_a_addr_1, S0=>nx637);
ix149 : mux21_ni port map ( Y=>ctrl_2_mem_mem_a_addr_2, A0=>
   init_2_mem_s_mem_a_addr_2, A1=>guru_2_mem_s_mem_a_addr_2, S0=>nx637);
ix157 : mux21_ni port map ( Y=>ctrl_2_mem_mem_a_addr_3, A0=>
   init_2_mem_s_mem_a_addr_3, A1=>guru_2_mem_s_mem_a_addr_3, S0=>nx637);
ix165 : mux21_ni port map ( Y=>ctrl_2_mem_mem_a_addr_4, A0=>
   init_2_mem_s_mem_a_addr_4, A1=>guru_2_mem_s_mem_a_addr_4, S0=>nx637);
```

```
   ix173 : mux21_ni port map ( Y=>ctrl_2_mem_mem_a_addr_5, A0=>
      init_2_mem_s_mem_a_addr_5, A1=>guru_2_mem_s_mem_a_addr_5, S0=>nx639);
   ix343 : nor02ii port map ( Y=>ctrl_2_dp_rb_out_sel_1, A0=>
      guru_2_dp_s_rb_out_sel_2, A1=>nx639);
   ix347 : nor02ii port map ( Y=>ctrl_2_dp_rb_out_sel_2, A0=>
      guru_2_dp_s_rb_out_sel_1, A1=>nx639);
   ix197 : mux21_ni port map ( Y=>ctrl_2_dp_rb_PRE_GURU_en, A0=>
      init_2_dp_s_rb_PRE_GURU_en, A1=>guru_2_dp_s_rb_GURU_en, S0=>nx639);
   ix205 : mux21_ni port map ( Y=>ctrl_2_dp_rb_GURU_en, A0=>
      init_2_dp_s_rb_GURU_en, A1=>guru_2_dp_s_rb_GURU_en, S0=>nx639);
   ix221 : mux21_ni port map ( Y=>ctrl_2_dp_ng_cte_incr_EXMPLR, A0=>
      init_2_dp_s_ng_cte_incr, A1=>guru_2_dp_s_ng_cte_incr, S0=>nx639);
   ix632 : inv02 port map ( Y=>nx633, A=>ctrl_2_dp_rb_out_sel_0_EXMPLR);
   ix634 : inv02 port map ( Y=>nx635, A=>ctrl_2_dp_rb_out_sel_0_EXMPLR);
   ix636 : inv02 port map ( Y=>nx637, A=>ctrl_2_dp_rb_out_sel_0_EXMPLR);
   ix638 : inv02 port map ( Y=>nx639, A=>ctrl_2_dp_rb_out_sel_0_EXMPLR);

end arch ;
```

Item 7) Insira no quadro abaixo o valor de área total do circuito gate level (0,35 um – 200MHz) e a seguir todo o relatório de área.

A área total desse circuito é de 1050 gates.

```
*******************************************************

Cell: fsm_guru    View: arch_unfold_1626    Library: work

*******************************************************


 Cell       Library  References     Total Area

dff         tsmc035_typ    11 x      5     53 gates
fake_gnd    tsmc035_typ     1 x      1      1 fake_gnd
fake_vcc    tsmc035_typ     1 x      1      1 fake_vcc
inv01       tsmc035_typ     5 x      1      4 gates
nand02      tsmc035_typ     8 x      1      8 gates
nand03      tsmc035_typ     1 x      1      1 gates
nor02_2x    tsmc035_typ    10 x      1     10 gates
nor03_2x    tsmc035_typ     6 x      1      7 gates
oai21       tsmc035_typ     1 x      1      1 gates
oai22       tsmc035_typ     1 x      1      1 gates
tri01       tsmc035_typ    15 x      1     18 gates

 Number of ports :                    37
 Number of nets :                     73
 Number of instances :                  60
 Number of references to this view :     1

Total accumulated area :
 Number of fake_gnd :                   1
```

```
 Number of fake_vcc :                    1
 Number of gates :                     103
 Number of accumulated instances :      60

*******************************************************

Cell: counter_trigger_500    View: arch    Library: work

*******************************************************


 Cell        Library  References     Total Area

and02        tsmc035_typ     2 x      1      3 gates
and03        tsmc035_typ     1 x      2      2 gates
and04        tsmc035_typ     7 x      2     12 gates
aoi22        tsmc035_typ     1 x      1      1 gates
buf02        tsmc035_typ     2 x      1      2 gates
buf04        tsmc035_typ     5 x      1      6 gates
dff          tsmc035_typ    33 x      5    158 gates
inv01        tsmc035_typ    11 x      1      8 gates
inv02        tsmc035_typ     8 x      1      6 gates
nand02       tsmc035_typ    29 x      1     29 gates
nand02_2x    tsmc035_typ     1 x      1      1 gates
nand03       tsmc035_typ    11 x      1     14 gates
nand04       tsmc035_typ     1 x      1      1 gates
nand04_2x    tsmc035_typ     1 x      2      2 gates
nor02_2x     tsmc035_typ    61 x      1     61 gates
nor02ii      tsmc035_typ     5 x      1      6 gates
nor03_2x     tsmc035_typ    22 x      1     27 gates
nor04        tsmc035_typ    16 x      1     24 gates
oai21        tsmc035_typ    13 x      1     16 gates
oai321       tsmc035_typ     1 x      2      2 gates

 Number of ports :                       4
 Number of nets :                      262
 Number of instances :                   231
 Number of references to this view :     2

Total accumulated area :
 Number of gates :                     382
 Number of accumulated instances :     231

*******************************************************

Cell: base_control    View: arch    Library: work

*******************************************************


 Cell                 Library  References     Total Area

counter_trigger_500    work           2 x    382    764 gates
dff                  tsmc035_typ     8 x      5     38 gates
fake_gnd               tsmc035_typ     1 x      1      1 fake_gnd
fake_vcc               tsmc035_typ     1 x      1      1 fake_vcc
fsm_guru               work           1 x    103    103 gates
                                        1      1 fake_gnd
                                        1      1 fake_vcc
inv01                tsmc035_typ     9 x      1      7 gates
inv02                tsmc035_typ    11 x      1      8 gates
mux21                tsmc035_typ     1 x      2      2 gates
nand02               tsmc035_typ    65 x      1     65 gates
nand03               tsmc035_typ     3 x      1      4 gates
```

```
nor02_2x          tsmc035_typ    19 x     1     19 gates
nor02ii           tsmc035_typ     1 x     1      1 gates
nor03_2x          tsmc035_typ     4 x     1      5 gates
oai21             tsmc035_typ     7 x     1      9 gates
oai22             tsmc035_typ     1 x     1      1 gates
tri01             tsmc035_typ    18 x     1     21 gates
xnor2             tsmc035_typ     1 x     2      2 gates

 Number of ports :                    41
 Number of nets :                    187
 Number of instances :                153
 Number of references to this view :    0

Total accumulated area :
 Number of fake_gnd :                  2
 Number of fake_vcc :                  2
 Number of gates :                  1050
 Number of accumulated instances :    672
```

Insira no quadro abaixo o valor de $f_{projetado}$ e $T_{projetado}$ do circuito gate level (0,35 um – 200MHz) e a seguir todo o relatório de timing.

- f_projetado = 200.2MHz
- T_projetado = 4.95ns

```
                    Clock Frequency Report

        Clock              : Frequency
    -----------------------------------

        clk                : 200.2 MHz


                    Critical Path Report


Critical path #1, (path slack =  0.0):

NAME                                    GATE          ARRIVAL          LOAD
-------------------------------------------------------------------------------------------
clock information not specified
delay thru clock network                                  0.00 (worst case)


cnt_strat/reg_cnt_s(0)/Q                    dff       0.00  0.56 dn          0.07
cnt_strat/cnt_s(0)                 (net)            0.00  0.56 dn   (fan)    5.00
cnt_strat/ix841/A3                       nand04      0.00  0.56 dn          0.00
cnt_strat/ix841/Y                        nand04      0.31  0.86 up          0.04
cnt_strat/nx840                    (net)            0.00  0.86 up   (fan)    2.00
cnt_strat/ix141/A3                        nor04      0.00  0.86 up          0.00
cnt_strat/ix141/Y                        nor04       0.13  0.99 dn          0.01
cnt_strat/nx509                    (net)            0.00  0.99 dn   (fan)    1.00
cnt_strat/ix845/A                        inv01       0.00  0.99 dn          0.00
cnt_strat/ix845/Y                        inv01       0.28  1.27 up          0.04
cnt_strat/nx844                    (net)            0.00  1.27 up   (fan)    2.00
cnt_strat/ix966/A                        inv02       0.00  1.27 up          0.00
cnt_strat/ix966/Y                        inv02       0.12  1.39 dn          0.03
cnt_strat/nx967                    (net)            0.00  1.39 dn   (fan)    2.00
cnt_strat/ix195/A3                       and04       0.00  1.39 dn          0.00
cnt_strat/ix195/Y                        and04       0.39  1.78 dn          0.03
cnt_strat/nx513                    (net)            0.00  1.78 dn   (fan)    2.00
cnt_strat/ix249/A3                       and04       0.00  1.78 dn          0.00
cnt_strat/ix249/Y                        and04       0.41  2.19 dn          0.03
cnt_strat/nx516                    (net)            0.00  2.19 dn   (fan)    2.00
cnt_strat/ix303/A3                       and04       0.00  2.19 dn          0.00
cnt_strat/ix303/Y                        and04       0.41  2.60 dn          0.03
cnt_strat/nx519                    (net)            0.00  2.60 dn   (fan)    2.00
cnt_strat/ix357/A3                       and04       0.00  2.60 dn          0.00
cnt_strat/ix357/Y                        and04       0.41  3.00 dn          0.03
cnt_strat/nx523                    (net)            0.00  3.00 dn   (fan)    2.00
cnt_strat/ix411/A3                       and04       0.00  3.00 dn          0.00
cnt_strat/ix411/Y                        and04       0.49  3.50 dn          0.05
cnt_strat/nx529                    (net)            0.00  3.50 dn   (fan)    5.00
cnt_strat/reg_nx532/A0                     and03       0.00  3.50 dn          0.00
cnt_strat/reg_nx532/Y                      and03       0.35  3.85 dn          0.03
cnt_strat/nx532                    (net)            0.00  3.85 dn   (fan)    3.00
cnt_strat/ix911/A1                       nand02      0.00  3.85 dn          0.00
cnt_strat/ix911/Y                        nand02      0.26  4.11 up          0.03
```

```
cnt_strat/nx910                    (net)          0.00  4.11 up   (fan)    2.00
cnt_strat/ix537/A3                      nor04      0.00  4.11 up          0.00
cnt_strat/ix537/Y                       nor04      0.16  4.27 dn          0.03
cnt_strat/nx536                    (net)          0.00  4.27 dn   (fan)    2.00
cnt_strat/ix929/A1                      nand02     0.00  4.27 dn          0.00
cnt_strat/ix929/Y                       nand02     0.20  4.48 up          0.01
cnt_strat/nx928                    (net)          0.00  4.48 up   (fan)    1.00
cnt_strat/ix927/A1                      oai21      0.00  4.48 up          0.00
cnt_strat/ix927/Y                       oai21      0.15  4.63 dn          0.02
cnt_strat/nx926                    (net)          0.00  4.63 dn   (fan)    1.00
cnt_strat/ix565/A1                      nor02_2x   0.00  4.63 dn          0.00
cnt_strat/ix565/Y                       nor02_2x   0.15  4.78 up          0.02
cnt_strat/nx564                    (net)          0.00  4.78 up   (fan)    1.00
cnt_strat/reg_cnt_s(30)/D                  dff     0.00  4.78 up          0.00
data arrival time                                  4.78


data required time  (default specified - setup time)              4.79
-------------------------------------------------------------------------------------
data required time                                 4.79
data arrival time                                  4.78
                                             ----------
slack                                              0.01
-------------------------------------------------------------------------------------
```

Item 8) Insira no quadro abaixo o valor de área total do circuito gate level (0,25 um – 345MHz) e a seguir todo o relatório de área.

- área total: 1142 gates

```
*******************************************************

Cell: fsm_guru    View: arch_unfold_1626    Library: work

*******************************************************


 Cell       Library  References     Total Area

aoi21       tsmc025_typ     2 x      1      2 gates
dff         tsmc025_typ    11 x      4     49 gates
fake_gnd    tsmc025_typ     1 x      1      1 fake_gnd
fake_vcc    tsmc025_typ     1 x      1      1 fake_vcc
inv01       tsmc025_typ     4 x      1      3 gates
nand02      tsmc025_typ    11 x      1     11 gates
nand03      tsmc025_typ     1 x      1      1 gates
nor02       tsmc025_typ    11 x      1     11 gates
nor03       tsmc025_typ     3 x      1      4 gates
oai22       tsmc025_typ     1 x      1      1 gates
tri01       tsmc025_typ    15 x      1     18 gates

 Number of ports :                  37
 Number of nets :                   73
```

```
 Number of instances :                  61
 Number of references to this view :     1

Total accumulated area :
 Number of fake_gnd :                    1
 Number of fake_vcc :                    1
 Number of gates :                     101
 Number of accumulated instances :      61

*******************************************************

Cell: counter_trigger_500    View: arch    Library: work

*******************************************************


 Cell        Library  References     Total Area

and02        tsmc025_typ    11 x      1     14 gates
and03        tsmc025_typ     1 x      2      2 gates
and04        tsmc025_typ    11 x      2     19 gates
ao22         tsmc025_typ     1 x      2      2 gates
aoi21        tsmc025_typ    23 x      1     29 gates
aoi22        tsmc025_typ     1 x      1      1 gates
buf04        tsmc025_typ     3 x      1      4 gates
buf16        tsmc025_typ    12 x      3     35 gates
dff          tsmc025_typ    33 x      4    146 gates
inv01        tsmc025_typ    11 x      1      8 gates
inv02        tsmc025_typ    18 x      1     14 gates
mux21        tsmc025_typ     1 x      2      2 gates
nand02       tsmc025_typ    20 x      1     20 gates
nand02_2x    tsmc025_typ     9 x      1      9 gates
nand03       tsmc025_typ    12 x      1     15 gates
nand03_2x    tsmc025_typ     6 x      1      7 gates
nand04       tsmc025_typ    10 x      1     15 gates
nand04_2x    tsmc025_typ    16 x      2     34 gates
nor02        tsmc025_typ    13 x      1     13 gates
nor02_2x     tsmc025_typ     3 x      1      3 gates
nor02ii      tsmc025_typ     1 x      1      1 gates
nor03        tsmc025_typ     8 x      1     10 gates
nor03_2x     tsmc025_typ     2 x      2      4 gates
nor04_2x     tsmc025_typ     4 x      2      9 gates
oai21        tsmc025_typ    10 x      1     12 gates
oai22        tsmc025_typ     2 x      1      3 gates
oai321       tsmc025_typ     1 x      2      2 gates

 Number of ports :                       4
 Number of nets :                      276
 Number of instances :                 243
 Number of references to this view :     2

Total accumulated area :
 Number of gates :                     432
 Number of accumulated instances :     243

*******************************************************

Cell: base_control    View: arch    Library: work

*******************************************************
```

```
 Cell                 Library  References     Total Area

aoi21                 tsmc025_typ     2 x      1      2 gates
counter_trigger_500    work           2 x    432    865 gates
dff                  tsmc025_typ     8 x      4     35 gates
fake_gnd              tsmc025_typ     1 x      1      1 fake_gnd
fake_vcc              tsmc025_typ     1 x      1      1 fake_vcc
fsm_guru              work           1 x    101    101 gates
                                     1      1 fake_gnd
                                     1      1 fake_vcc
inv01                 tsmc025_typ    20 x      1     15 gates
nand02                tsmc025_typ    77 x      1     77 gates
nand03                tsmc025_typ    12 x      1     15 gates
nor02                 tsmc025_typ     6 x      1      6 gates
nor02ii               tsmc025_typ     1 x      1      1 gates
oai21                 tsmc025_typ     1 x      1      1 gates
tri01                 tsmc025_typ    18 x      1     22 gates
xnor2                 tsmc025_typ     1 x      2      2 gates

 Number of ports :                    41
 Number of nets :                    186
 Number of instances :                151
 Number of references to this view :     0

Total accumulated area :
 Number of fake_gnd :                  2
 Number of fake_vcc :                  2
 Number of gates :                  1142
 Number of accumulated instances :     695
```

Insira no quadro abaixo o valor $f_{projetado}$ de e $T_{projetado}$ do circuito gate level (0,25 um – 345MHz) e a seguir todo o relatório de timing.

- f_projetado: 380.2Mhz
- T_projetado: 2.63ns

```
                Clock Frequency Report

     Clock              : Frequency
  -----------------------------------

     clk                : 380.2 MHz


                Critical Path Report


Critical path #1, (path slack =  0.3):

NAME                                    GATE          ARRIVAL          LOAD
-------------------------------------------------------------------------------------
clock information not specified
delay thru clock network                                0.00 (worst case)


cnt_prep/reg_cnt_s(2)/Q                   dff       0.00  0.67 dn          0.08
cnt_prep/cnt_s(2)                (net)            0.00  0.67 dn   (fan)   6.00
cnt_prep/ix1034/A3                      nand04_2x   0.00  0.67 dn          0.00
cnt_prep/ix1034/Y                       nand04_2x   0.28  0.95 up          0.07
cnt_prep/nx959                   (net)            0.00  0.95 up   (fan)   3.00
cnt_prep/ix1043/A3                      nor04_2x    0.00  0.95 up          0.00
cnt_prep/ix1043/Y                       nor04_2x    0.09  1.04 dn          0.01
cnt_prep/nx968                   (net)            0.00  1.04 dn   (fan)   1.00
cnt_prep/reg_nx515/A0                     and04     0.00  1.04 dn          0.00
cnt_prep/reg_nx515/Y                      and04     0.32  1.36 dn          0.05
cnt_prep/nx515                   (net)            0.00  1.36 dn   (fan)   4.00
cnt_prep/reg_nx929/A1                     and02     0.00  1.36 dn          0.00
cnt_prep/reg_nx929/Y                      and02     0.33  1.68 dn          0.04
cnt_prep/nx929                   (net)            0.00  1.68 dn   (fan)   4.00
cnt_prep/reg_nx519/A0                     and02     0.00  1.68 dn          0.00
cnt_prep/reg_nx519/Y                      and02     0.22  1.91 dn          0.02
cnt_prep/nx519                   (net)            0.00  1.91 dn   (fan)   2.00
cnt_prep/ix1072/A0                      nand03_2x   0.00  1.91 dn          0.00
cnt_prep/ix1072/Y                       nand03_2x   0.10  2.01 up          0.01
cnt_prep/nx997                   (net)            0.00  2.01 up   (fan)   1.00
cnt_prep/ix1074/A0                      oai21       0.00  2.01 up          0.00
cnt_prep/ix1074/Y                       oai21       0.12  2.13 dn          0.01
cnt_prep/nx999                   (net)            0.00  2.13 dn   (fan)   1.00
```

```
cnt_prep/reg_nx420/A1                    nor02ii    0.00  2.13 dn          0.00
cnt_prep/reg_nx420/Y                     nor02ii    0.20  2.33 dn          0.02
cnt_prep/nx420                  (net)            0.00  2.33 dn   (fan)    1.00
cnt_prep/reg_cnt_s(22)/D                 dff        0.00  2.33 dn          0.00
data arrival time                                  2.33


data required time  (default specified - setup time)              2.60
-------------------------------------------------------------------------------------
data required time                                   2.60
data arrival time                                   2.33
                                                 ----------
slack                                                0.27
-------------------------------------------------------------------------------------
```

Item 9) Insira no quadro abaixo o valor de área total do circuito gate level (0,18 um – 345MHz) e a seguir todo o relatório de área.

- Área total: 946 gates

```
*****************************************************

Cell: fsm_guru    View: arch_unfold_1626    Library: work

*****************************************************


 Cell       Library  References     Total Area

aoi21       tsmc018_typ     3 x      1      4 gates
dff         tsmc018_typ    11 x      4     49 gates
fake_gnd    tsmc018_typ     1 x      1      1 fake_gnd
fake_vcc    tsmc018_typ     1 x      1      1 fake_vcc
inv01       tsmc018_typ     5 x      1      4 gates
nand02      tsmc018_typ     8 x      1      8 gates
nand03      tsmc018_typ     1 x      1      1 gates
nor02       tsmc018_typ     6 x      1      6 gates
nor03       tsmc018_typ     6 x      1      7 gates
oai22       tsmc018_typ     1 x      1      1 gates
tri01       tsmc018_typ    15 x      1     18 gates

 Number of ports :                    37
 Number of nets :                     72
 Number of instances :                  58
 Number of references to this view :     1

Total accumulated area :
 Number of fake_gnd :                   1
 Number of fake_vcc :                   1
 Number of gates :                    98
 Number of accumulated instances :      58

*****************************************************
```

```
Cell: counter_trigger_500    View: arch    Library: work

*******************************************************


 Cell     Library  References     Total Area

and04     tsmc018_typ    13 x      2     23 gates
aoi21     tsmc018_typ    24 x      1     30 gates
dff       tsmc018_typ    33 x      4    146 gates
inv01     tsmc018_typ    21 x      1     16 gates
mux21     tsmc018_typ     1 x      2      2 gates
nand02    tsmc018_typ    26 x      1     26 gates
nand03    tsmc018_typ    21 x      1     26 gates
nand04    tsmc018_typ    11 x      1     16 gates
nor02     tsmc018_typ    18 x      1     18 gates
nor03     tsmc018_typ    14 x      1     17 gates
oai21     tsmc018_typ    12 x      1     15 gates
xnor2     tsmc018_typ     1 x      2      2 gates

 Number of ports :                    4
 Number of nets :                   231
 Number of instances :              195
 Number of references to this view :     2

Total accumulated area :
 Number of gates :                  337
 Number of accumulated instances :     195

*******************************************************

Cell: base_control    View: arch    Library: work

*******************************************************


 Cell                 Library  References     Total Area

aoi21                 tsmc018_typ     4 x      1      5 gates
counter_trigger_500    work           2 x    337    673 gates
dff                   tsmc018_typ     8 x      4     35 gates
fake_gnd              tsmc018_typ     1 x      1      1 fake_gnd
fake_vcc              tsmc018_typ     1 x      1      1 fake_vcc
fsm_guru              work            1 x     98     98 gates
                                      1      1 fake_gnd
                                      1      1 fake_vcc
inv01                 tsmc018_typ    56 x      1     42 gates
mux21                 tsmc018_typ    19 x      2     31 gates
nand02                tsmc018_typ    13 x      1     13 gates
nand03                tsmc018_typ     7 x      1      9 gates
nor02                 tsmc018_typ     5 x      1      5 gates
nor03                 tsmc018_typ     1 x      1      1 gates
oai21                 tsmc018_typ     4 x      1      5 gates
oai22                 tsmc018_typ     3 x      1      4 gates
tri01                 tsmc018_typ    18 x      1     22 gates
xnor2                 tsmc018_typ     1 x      2      2 gates

 Number of ports :                   41
 Number of nets :                   178
 Number of instances :              144
 Number of references to this view :     0
```

```
Total accumulated area :
 Number of fake_gnd :                2
 Number of fake_vcc :                2
 Number of gates :                 946
 Number of accumulated instances :    589
```

Item 10) Apresente abaixo a estimativa de freq. máxim ($f_{projetado}$) para 28nm. Mostre os cálculos.